LX-HNK GRUNDKÖRPER M. KLEMMFL. F. KUNSTS

LORO-X main emergency combination base body with clamp flange for plastic DN 100/50

Opis

LORO-X main-emergency combination parapet drain base body, series 88 pipe-in-pipe, for main drainage with gravity flow and emergency drainage with siphonic flow, with clamping flange, as loose and fixed flange construction, 90-degree upstand for plastic roofing sheets, penetration depth 106 mm, according to DIN EN 1253, made of steel, hot-dip galvanized, DN100/50

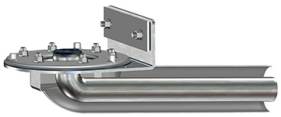

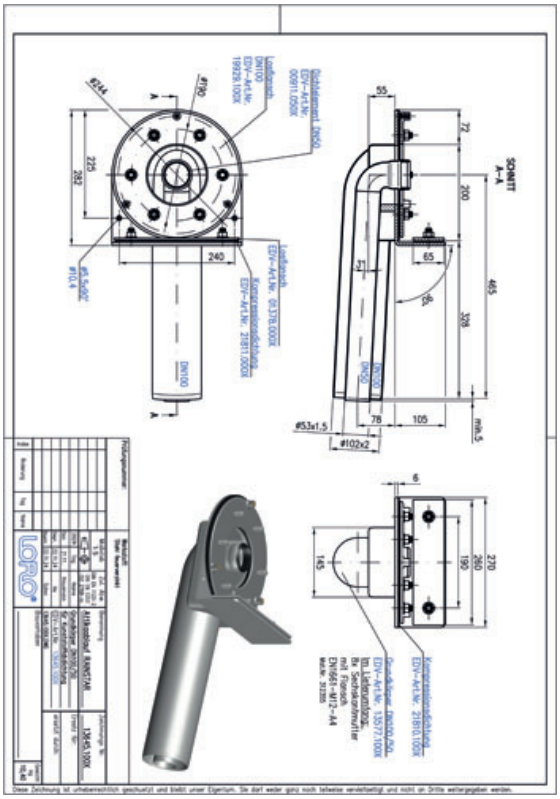

Podaci o artiklu

EAN kod	4038088109120
ETIM klasa	EC010400
Nazivni promjer	DN 100
Vanjske mjere (VxŠxD)	232 x 270 x 605 mm
Težina	10,40 Kg (STK)
Grupa proizvoda	9
Carinski tarifni broj	73089098
Materijal / Boja	Edelstahl, Silber

Napomena za upotrebu

kein Verwendungshinweis notwendig

Preuzimanja

Alles online

Dimenzijski crtež (PDF)
CAD 2D (DXF)
BIM 3D (IFC)
Prospekt (PDF)
CAD 3D (DWG)
Certifikat (PDF)
BIM 3D (STEP)