LORO-X SLIDING FLANGE WITH PRE-INSTALLED CONNECTION SLEEVE FOR VAPOR BARRIER WITH BITUMINOUS ROOFING SHEETS DN 100

LORO sliding flange with connecting sleeve for bitumen DN 100

Beskrivning

LORO-sliding flange with connecting collar, made of steel, hot-dip galvanized, for vapour barriers made of bituminous roofing sheets, DN100

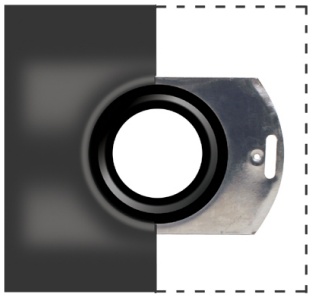

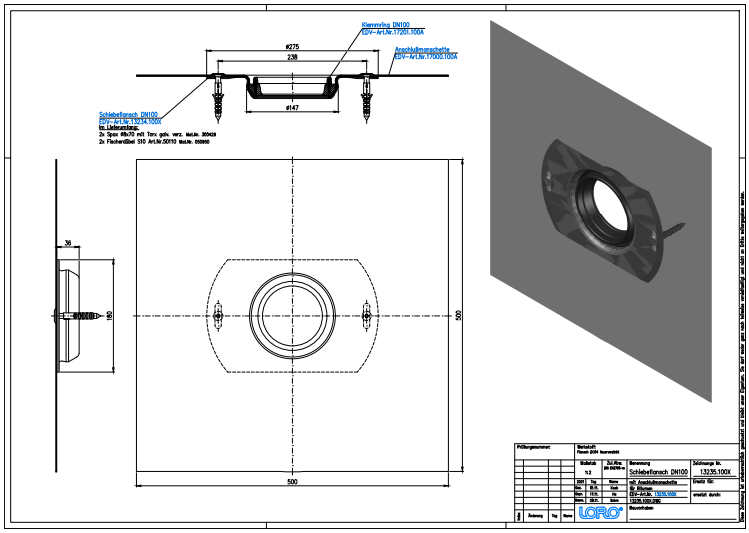

Artikeldata

EAN-kod	4038088066379
ETIM-klass	EC010599
Nominell diameter	DN 100
Yttermått (HxBxL)	320 x 320 x 56 mm
Vikt	1,70 Kg (STK)
Produktgrupp	9
Tullnummer	73089098
Material / Färg	Stahl feuerverzinkt, Silber

Användningsanvisning

kein Verwendungshinweis notwendig

Nedladdningar

Alles online

Måttritning (PDF)
CAD 3D (DWG)
BIM Revit (RFA)
Broschyr (PDF)
BIM 3D (STEP)
CAD 2D (DXF)
BIM 3D (IFC)