## LX-UMLENKUNGSFORMST.DN100/50/50

**LORO-X baffle DN 100/50/50**

### Beskrivelsestekst

LORO-X DUOSTREAM high performance transition from pipe-in-pipe downpipe DN100/50, to double pipe DN 50/50, made of steel, hot-dip galvanized, DN100/50

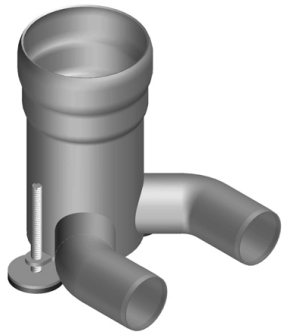

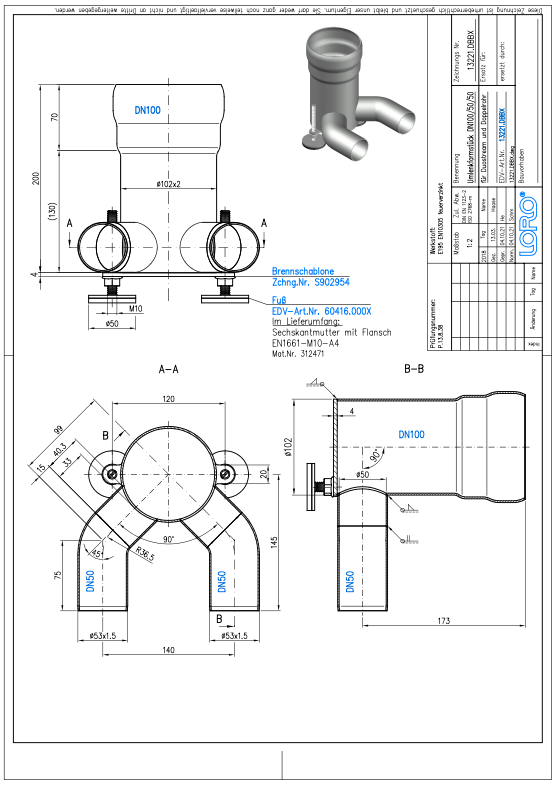


### Artikkeldata

| | |
|---|---|
| **EAN-kode** | **4038088101896** |
| **ETIM-klasse** | **EC003025** |
| **Nominell diameter** | **DN 100, DN 50, DN 50** |
| **Utvendige mål (HxBxL)** | **204 x 195 x 205 mm** |
| **Vekt** | **2,00 Kg (STK)** |
| **Produktgruppe** | **9** |
| **Tolltariffnummer** | **73089098** |
| **Materiale / Farge** | **Stahl feuerverzinkt, Silber** |

### Bruksanvisning

kein Verwendungshinweis notwendig

### Nedlastinger

Alles online

Måltegning (PDF)
Systemdatablad LX 1904
BIM 3D (STEP)
Brosjyre (PDF)
CAD 2D (DXF)
BIM 3D (IFC)
Godkjenning (PDF)
CAD 3D (DWG)