LORO-X DECK AND BULKHEAD PENETRATION FORM T1 DN 50

LORO-X deck and bulkhead duct form T1 DN 50

Descrizione

LORO-X deck and bulkhead penetrations, shape T1, made of steel, hot-dip galvanized, inner pipe additionally coated, DN50

Dati articolo

Codice EAN	4038088029190
Classe ETIM	EC011636
Diametro nominale	DN 50
Misure esterne (AxLxP)	93 x 93 x 305 mm
Peso	2,50 Kg (STK)
Gruppo prodotti	8
Numero tariffa doganale	73089098
Materiale / Colore	Stahl feuerverzinkt, Silber

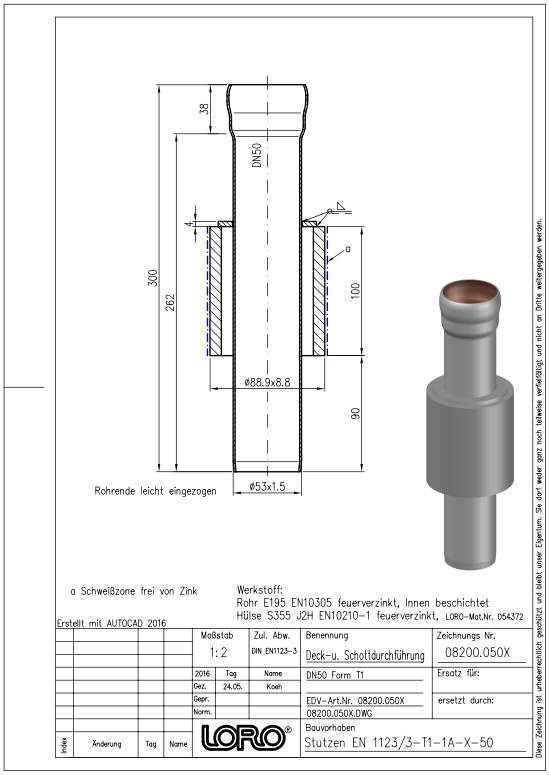

Note d'uso

kein Verwendungshinweis notwendig

Download

Alles online

Disegno dimensionale (PDF)
Brochure (PDF)
CAD 2D (DXF)
CAD 3D (DWG)
BIM 3D (STEP)
BIM 3D (IFC)