LORO-X CLOSING PLUG WITH EXTENSION DN 100

LORO-X end cap with extended spigot DN 100

Descrizione

LORO-X closing plug with extended peaked end, made of stainles steel, for pressurized pipes, in accordance with DIN EN 1124 with raised quality standard, building material class A1, dimensionally stable, break-proof, backflow-safe, DN100

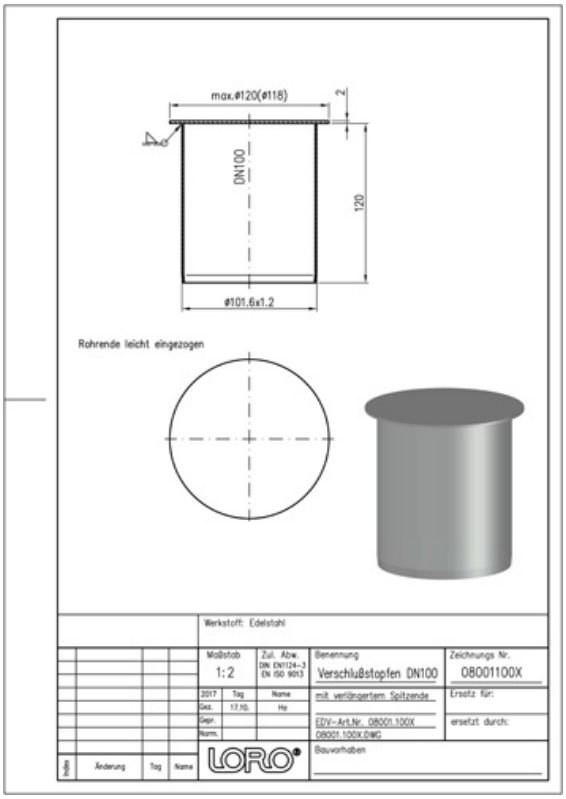

Dati articolo

Codice EAN	**4038088041383**
Classe ETIM	**EC003023**
Diametro nominale	**DN 100**
Misure esterne (AxLxP)	**120 x 120 x 122 mm**
Peso	**0,70 Kg (STK)**
Gruppo prodotti	**1**
Numero tariffa doganale	**73072980**
Materiale / Colore	**Edelstahl, Silber**

Note d'uso

kein Verwendungshinweis notwendig

Download

Alles online

Istruzioni di installazione (PDF)
Disegno dimensionale (PDF)
Brochure (PDF)
Certificato (PDF)
CAD 2D (DXF)
CAD 3D (DWG)
BIM 3D (STEP)
BIM 3D (IFC)