LORO-X CONNECTING FOR SINFONIC FLOW DN 100/70

LORO-X connection piece DRAINJET DN 100/70

Beskrivelse

LORO-DRAINJET connector, according to DIN EN 1123, with raised quality standard, with 2-chamber push-fit socket connection, made of steel, hot-dip galvanized, building material class A1, dimensionally stable, break-proof, backflow-safe, long-life inside coating according to DIN EN ISO 2178 on the basis of a 2-component epoxy combination, colour: red-brown, DN100/70

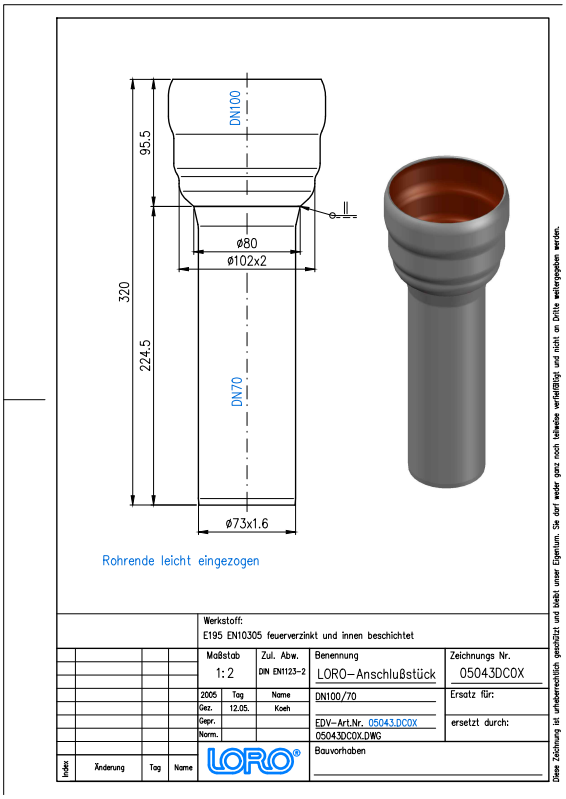

Artikkeldata

EAN-kode	4038088073179
ETIM-klasse	EC003024
Nominell diameter	DN 100, DN 70
Utvendige mål (HxBxL)	118 x 118 x 320 mm
Vekt	1,30 Kg (STK)
Produktgruppe	1
Tolltariffnummer	73089098
Materiale / Farge	Stahl feuerverzinkt, Silber

Bruksanvisning

kein Verwendungshinweis notwendig

Nedlastinger

Alles online

Monteringsanvisning (PDF)
Godkjenning (PDF)
BIM 3D (STEP)
Måltegning (PDF)
CAD 2D (DXF)
BIM 3D (IFC)
Brosjyre (PDF)
CAD 3D (DWG)