LORO-X CONNECTING BEND FOR SINFONIC FLOW 90 DEGREE DN 70/70

LORO-X connecting bend DRAINJET DN 70/70

Description

LORO-DRAINJET connecting bend, according to DIN EN 1123, with raised quality standard, with 2-chamber push-fit socket connection, made of steel, hot-dip galvanized, building material class A1, dimensionally stable, break-proof, backflow-safe, long-life inside coating according to DIN EN ISO 2178 on the basis of a 2-component epoxy combination, colour: red-brown, 90 degrees, DN70/70

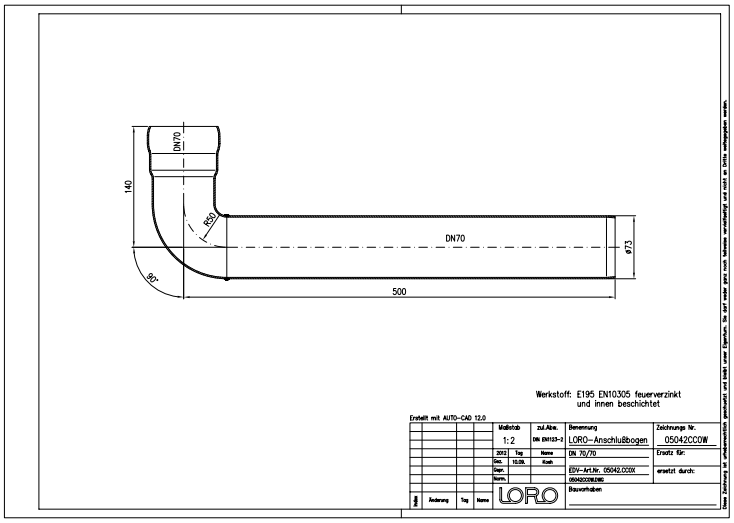

Article information

EAN Code	**4038088062579**
ETIM Class	**EC003024**
Nominal diameter	**DN 70, DN 70**
Outside measurements (HxWxL)	**84 x 542 x 177 mm**
Weight	**2,00 Kg (STK)**
Product group	**1**
Customs tariff number	**73089098**
Material / Color	**Stahl feuerverzinkt, Silber**

Usage note

kein Verwendungshinweis notwendig

Downloads

Installation (PDF)
Certificate (PDF)
CAD drawing (PDF)
CAD 2D (DXF)
Brochure (PDF)
CAD (DWG)

Alles online