LORO-X S-TRAP DN 100

LORO-X S odour trap DN 100

Opis

LORO-X S-trap, made of steel, hot-dip galvanized, according to DIN EN 1123, with raised quality standard, with 2-chamber push-fit socket connection, building material class A1, dimensionally stable, break-proof, backflow-safe, long-life inside coating according to DIN EN ISO 2178 on the basis of a 2-component epoxy combination, colour: red-brown, DN100

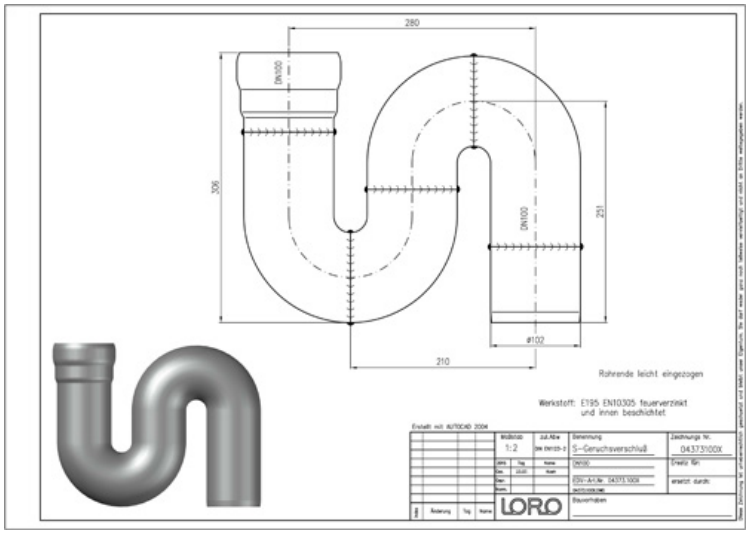

Podaci o artiklu

EAN kod	**4038088020777**
ETIM klasa	**EC010129**
Nazivni promjer	**DN 100**
Vanjske mjere (VxŠxD)	**118 x 390 x 306 mm**
Težina	**5,00 Kg (STK)**
Grupa proizvoda	**1**
Carinski tarifni broj	**73089098**
Materijal / Boja	**Stahl feuerverzinkt, Silber**

Napomena za upotrebu

kein Verwendungshinweis notwendig

Preuzimanja

Alles online

Upute za ugradnju (PDF)
Dimenzijski crtež (PDF)
Prospekt (PDF)
Certifikat (PDF)
CAD 2D (DXF)
CAD 3D (DWG)
BIM 3D (STEP)
BIM 3D (IFC)