LORO-X DRAINJET EMERGENCY SCUPPER DRAIN, SIPHONIC FLOW, SERIES 62, WITHOUT ROOF PENETRATION, WITH CLAMPING FLANGE FOR

LORO-DRAINJET ATTIKA Emergency drain with clamping flange for plastic, height 50 m Series 62 DN 70

Descripción

LORO-X DRAINJET siphonic parapet drain, series 62 without penetration into the roof, for emergency drainage with siphonic flow, discharge rate 14.5 l/s at 75 mm water level on the roof and 50 mm weir height, with clamping flange, as loose and fixed flange construction, 90-degree upstand for plastic roofing sheets, roof penetration depth 0 mm, in accordance with DIN EN 1253, proof of performance with standard-compliant testing system with 4.2m non-ventilated downpipe according to system data sheet LX637, made of stainless steel, DN70

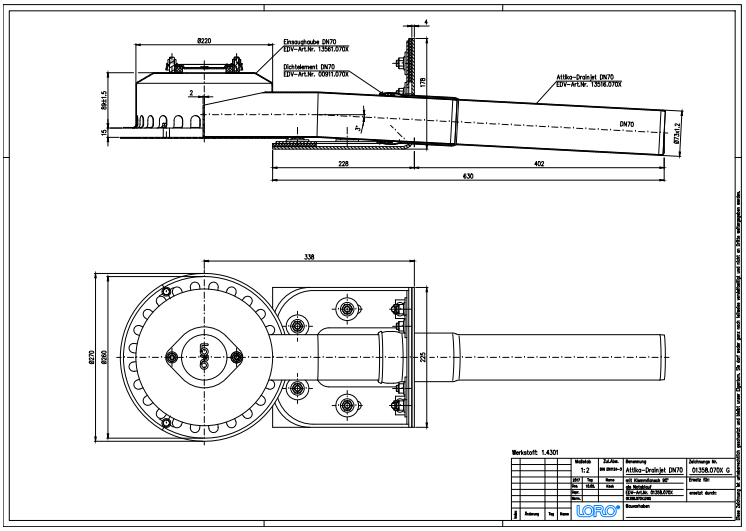

Datos del artículo

Código EAN	4038088066188
Clase ETIM	EC010400
Diámetro nominal	DN 70
Medidas exteriores (AxAxL)	270 x 878 x 188 mm
Peso	7,90 Kg (STK)
Grupo de productos	9
Número de arancel aduanero	73072980
Material / Color	Edelstahl, Silber

Nota de uso

LORO-DRAINJET® Attika-Notabläufe-ohne Eingriff ins Dach, DN 50 und DN 70, für Kunststoff-Dachabdichtungsbahnen

Descargas

Alles online

Instrucciones de instalación (PDF)
Dibujo dimensional (PDF)
Folleto (PDF)
Certificado (PDF)
Ficha técnica del sistema LX 637
CAD 2D (DXF)
CAD 3D (DWG)
BIM 3D (STEP)
BIM 3D (IFC)