LORO-X DRAINJET EMERGENCY SCUPPER DRAIN, SIPHONIC FLOW, SERIES 62, WITHOUT ROOF PENETRATION, WITH CLAMPING FLANGE FOR

LORO-DRAINJET ATTIKA Emergency drain with clamping flange for plastic, height 50 m Series 62 DN 70

Text pre výberové konanie

LORO-X DRAINJET siphonic parapet drain, series 62 without penetration into the roof, for emergency drainage with siphonic flow, discharge rate 14.5 l/s at 75 mm water level on the roof and 50 mm weir height, with clamping flange, as loose and fixed flange construction, 90-degree upstand for plastic roofing sheets, roof penetration depth 0 mm, in accordance with DIN EN 1253, proof of performance with standard-compliant testing system with 4.2m non-ventilated downpipe according to system data sheet LX637, made of stainless steel, DN70



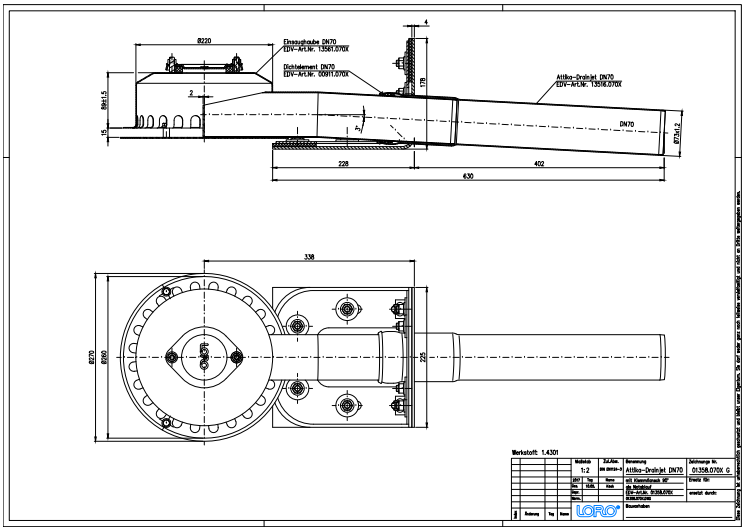

Údaje o artikli

EAN kód	4038088066188
ETIM trieda	EC010400
Menovitý priemer	DN 70
Vonkajšie rozmery (VxŠxH)	270 x 878 x 188 mm
Hmotnosť	7,90 Kg (STK)
Skupina produktov	9
Colný sadzobník	73072980
Materiál / Farba	Edelstahl, Silber

Pokyny na použitie

LORO-DRAINJET® Attika-Notabläufe-ohne Eingriff ins Dach, DN 50 und DN 70, für Kunststoff-Dachabdichtungsbahnen

Na stiahnutie

Alles online

Návod na montáž (PDF)
Certifikát (PDF)
CAD 3D (DWG)
Rozmerový výkres (PDF)
Systémový dátový list LX 637
BIM 3D (STEP)
Prospekt (PDF)
CAD 2D (DXF)
BIM 3D (IFC)