LORO-X DRAINJET EMERGENCY SCUPPER DRAIN, SIPHONIC FLOW, SERIES 62, WITHOUT ROOF PENETRATION, WITH CLAMPING FLANGE FOR

LORO-DRAINJET ATTIKA Emergency drain with clamping flange for plastic, height 50 m Series 62 DN 70

Tarjouspyyntöteksti

LORO-X DRAINJET siphonic parapet drain, series 62 without penetration into the roof, for emergency drainage with siphonic flow, discharge rate 14.5 l/s at 75 mm water level on the roof and 50 mm weir height, with clamping flange, as loose and fixed flange construction, 90-degree upstand for plastic roofing sheets, roof penetration depth 0 mm, in accordance with DIN EN 1253, proof of performance with standard-compliant testing system with 4.2m non-ventilated downpipe according to system data sheet LX637, made of stainless steel, DN70



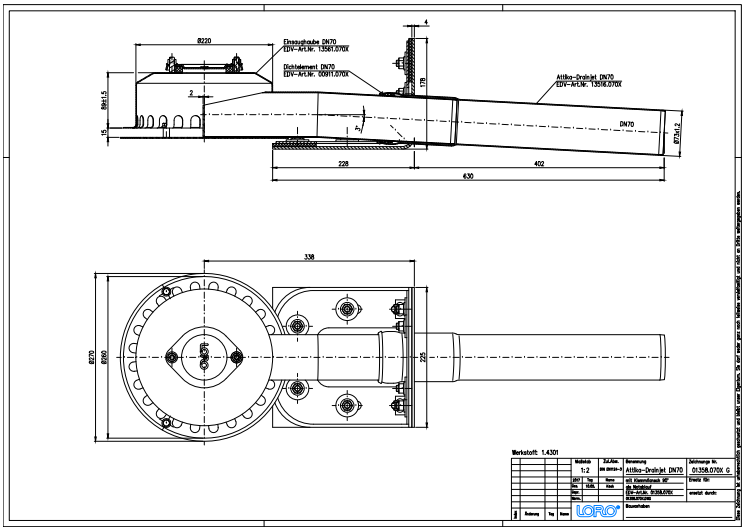

Tuotetiedot

EAN-koodi	4038088066188
ETIM-luokka	EC010400
Nimellishalkaisija	DN 70
Ulkomitat (KxLxS)	270 x 878 x 188 mm
Paino	7,90 Kg (STK)
Tuoteryhmä	9
Tullitariffin numero	73072980
Materiaali / Väri	Edelstahl, Silber

Käyttöohje

LORO-DRAINJET® Attika-Notabläufe-ohne Eingriff ins Dach, DN 50 und DN 70, für Kunststoff-Dachabdichtungsbahnen

Lataukset

Alles online

Asennusohje (PDF)
Hyväksyntä (PDF)
CAD 3D (DWG)
Mittapiirustus (PDF)
Järjestelmän datalehti LX 637
BIM 3D (STEP)
Esite (PDF)
CAD 2D (DXF)
BIM 3D (IFC)