LORO-X DRAINJET SCUPPER DRAIN, SIPHONIC FLOW, SERIES 62, WITHOUT ROOF PENETRATION,WITH CLAMPING FLANGE FOR PLASTIC ROOFING

LORO-DRAINJET Attic drain with clamping flange for plastic Series 62 DN 70

Descrizione

LORO-X DRAINJET siphonic parapet drain, series 62 without penetration into the roof, for main drainage with siphonic flow, discharge rate 16.0 l/s at 55 mm water level on the roof, with clamping flange, as loose and fixed flange construction, 90-degree upstand for plastic roofing sheets, roof penetration depth 0 mm, in accordance with DIN EN 1253, proof of performance with standard-compliant testing system with 4.2m non-ventilated downpipe according to system data sheet LX636, made of stainless steel, DN70

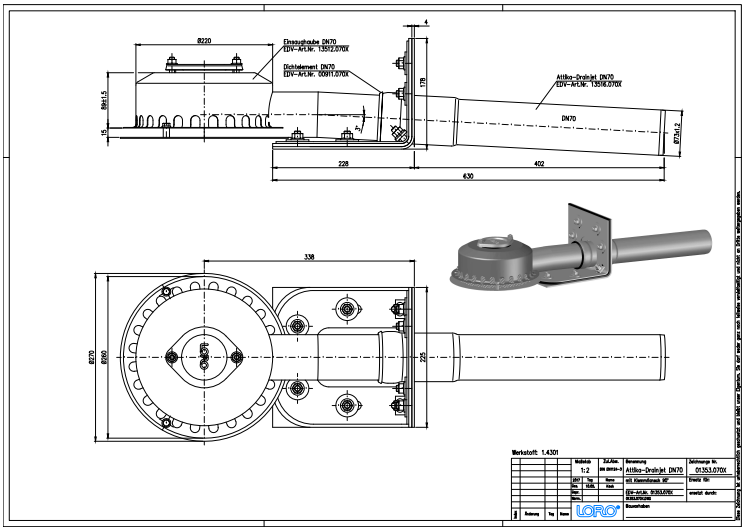

Dati articolo

Codice EAN	4038088066126
Classe ETIM	EC010400
Diametro nominale	DN 70
Misure esterne (AxLxP)	270 x 869 x 188 mm
Peso	8,10 Kg (STK)
Gruppo prodotti	9
Numero tariffa doganale	73072980
Materiale / Colore	Edelstahl, Silber

Note d'uso

LORO-DRAINJET® Attika-Schnellabläufe-ohne Eingriff ins Dach, DN 50 und DN 70, für Kunststoff-Dachabdichtungsbahnen

Download

Alles online

[Istruzioni di installazione (PDF)](#)
[Disegno dimensionale (PDF)](#)
[Brochure (PDF)](#)
[Certificato (PDF)](#)
[Scheda tecnica del sistema LX 636](#)
[CAD 2D (DXF)](#)
[CAD 3D (DWG)](#)
[BIM 3D (STEP)](#)
[BIM 3D (IFC)](#)