LORO-X ADAPTOR FROM CAST-IRON PIPE DN 70 TO LORO SOCKET

LORO-X connecting piece SML 70 to LORO-X socket DN 70

Descrizione

LORO-X connector made of steel, hot-dip galvanized, for transition from SML pipe DN70 to steel pipe socket DN70, in accordance with DIN EN 1123 with raised quality standard, with 2-chamber push-fit socket connection, building material class A1, dimensionally stable, break-proof, backflow-safe, long-life inside coating according to DIN EN ISO 2178 on the basis of a 2-component epoxy combination, colour: red-brown, DN70/70

Dati articolo

Codice EAN	4038088028292
Classe ETIM	EC003024
Diametro nominale	DN 70
Misure esterne (AxLxP)	78 x 78 x 108 mm
Peso	0,30 Kg (STK)
Gruppo prodotti	1
Numero tariffa doganale	73089098
Materiale / Colore	Stahl feuerverzinkt, Silber

Note d'uso

kein Verwendungshinweis notwendig

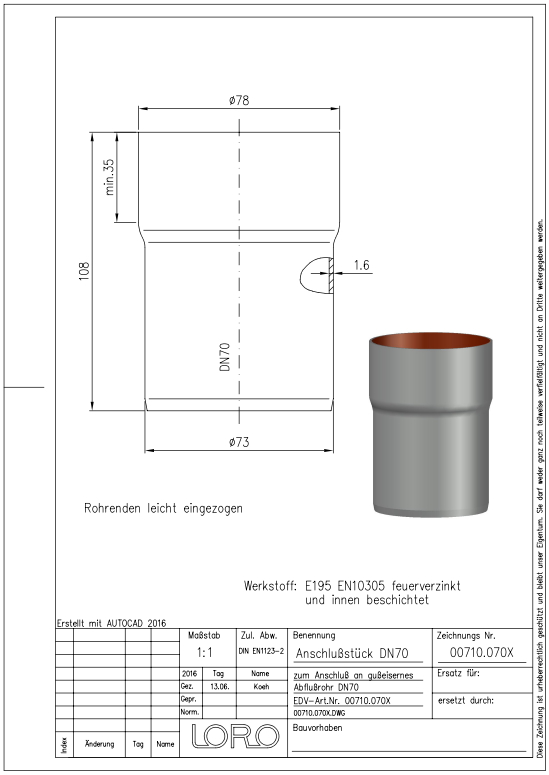

Download

Alles online

[Istruzioni di installazione (PDF)]
[Disegno dimensionale (PDF)]
[Brochure (PDF)]
[Certificato (PDF)]
[CAD 2D (DXF)]
[CAD 3D (DWG)]
[BIM 3D (STEP)]
[BIM 3D (IFC)]