LORO-X RED.-STÜCK KONZ. VERSENKT,

LORO-X Red.-Stck concentrically countersunk DN 70/100

Beskrivelse

LORO-X reducer, made of steel, hot-dip galvanized, concentric, recessed in accordance with DIN EN 1123 with raised quality standard, with 2-chamber push-fit socket connection, building material class A1, dimensionally stable, break-proof, backflow-safe, long-life inside coating according to DIN EN ISO 2178 on the basis of a 2-component epoxy combination, colour: red-brown, DN70/100

Artikeldata

EAN-kode	4038088082638
ETIM Klasse	EC003024
Nominel diameter	DN 70, DN 100
Ydermål (HxBxL)	110 x 110 x 85 mm
Vægt	0,70 Kg (STK)
Produktgruppe	1
Toldtarifnummer	73089098
Materiale / Farve	Stahl feuerverzinkt, Silber

Brugsanvisning

kein Verwendungshinweis notwendig

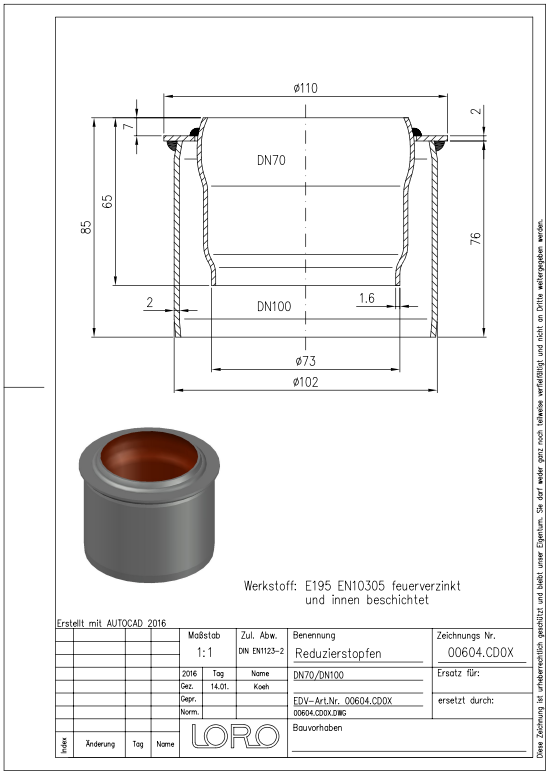

Downloads

Alles online

- Installationsvejledning (PDF)
- Certifikat (PDF)
- BIM 3D (STEP)
- Måltegning (PDF)
- CAD 2D (DXF)
- BIM 3D (IFC)
- Brochure (PDF)
- CAD 3D (DWG)