LORO-X TRANSITION PIPE CONCENTRIC DN 70/80

LORO-X concentric transition pipe DN 70/80

Beskrivning

LORO-X transition pipe, made of steel, hot-dip galvanized, concentric, in accordance with DIN EN 1123 with raised quality standard, with 2-chamber push-fit socket connection, building material class A1, dimensionally stable, break-proof, backflow-safe, long-life inside coating according to DIN EN ISO 2178 on the basis of a 2-component epoxy combination, colour: red-brown, DN70/80

Artikeldata

EAN-kod	4038088027271
ETIM-klass	EC003024
Nominell diameter	DN 70, DN 80
Yttermått (HxBxL)	89 x 89 x 190 mm
Vikt	0,70 Kg (STK)
Produktgrupp	1
Tullnummer	73089098
Material / Färg	Stahl feuerverzinkt, Silber

Användningsanvisning

kein Verwendungshinweis notwendig

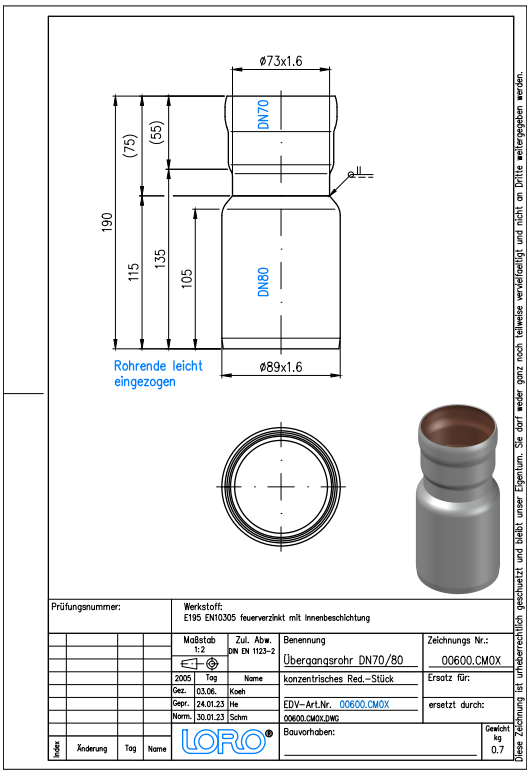

Nedladdningar

Alles online

- Monteringsanvisning (PDF)
- Godkännande (PDF)
- BIM 3D (STEP)
- Måttritning (PDF)
- CAD 2D (DXF)
- BIM 3D (IFC)
- Broschyr (PDF)
- CAD 3D (DWG)