LORO-X PIPE WITH CLEANOUT DN 80 CLEAN-OUT OPENING

LORO-X cleaning pipe round opening DN 80

Opis

LORO-X cleaning pipe, made of steel, hot-dip galvanized, with round clean-out opening, in accordance with DIN EN 1123 with raised quality standard, with 2-chamber push-fit socket connection, building material class A1, dimensionally stable, break-proof, backflow-safe, long-life inside coating according to DIN EN ISO 2178 on the basis of a 2-component epoxy combination, colour: red-brown, DN 80

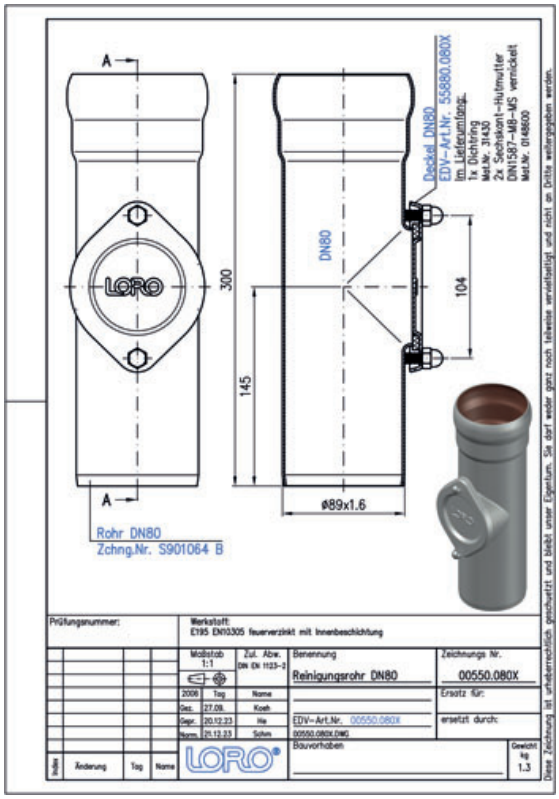

Podaci o artiklu

EAN kod	4038088023068
ETIM klasa	EC010323
Nazivni promjer	DN 80
Vanjske mjere (VxŠxD)	102 x 102 x 300 mm
Težina	1,30 Kg (STK)
Grupa proizvoda	1
Carinski tarifni broj	73089098
Materijal / Boja	Stahl feuerverzinkt, Silber

Napomena za upotrebu

LORO-X Reinigungsrohre mit Reinigungsöffnung ermöglichen die Reinigung, Wartung und Inspektion von Fallrohren und Grundleitungen z.B. mit der Spirale oder Kamera.Alternativ finden Sie hier längere LORO-X Regenstandrohre.

Preuzimanja

Alles online

Upute za ugradnju (PDF)
Dimenzijski crtež (PDF)
Prospekt (PDF)
Certifikat (PDF)
CAD 2D (DXF)
CAD 3D (DWG)
BIM 3D (STEP)
BIM 3D (IFC)