LORO-X BEND 15 DEGREE DN 100

LORO-X bend 15 degrees DN 100

Beskrivelse

LORO-X bend, made of steel, hot-dip galvanized, in accordance with DIN EN 1123 with raised quality standard, with 2-chamber push-fit socket connection, building material class A1, dimensionally stable, break-proof, backflow-safe, long-life inside coating according to DIN EN ISO 2178 on the basis of a 2-component epoxy combination, colour: red-brown, 15 degrees, DN100

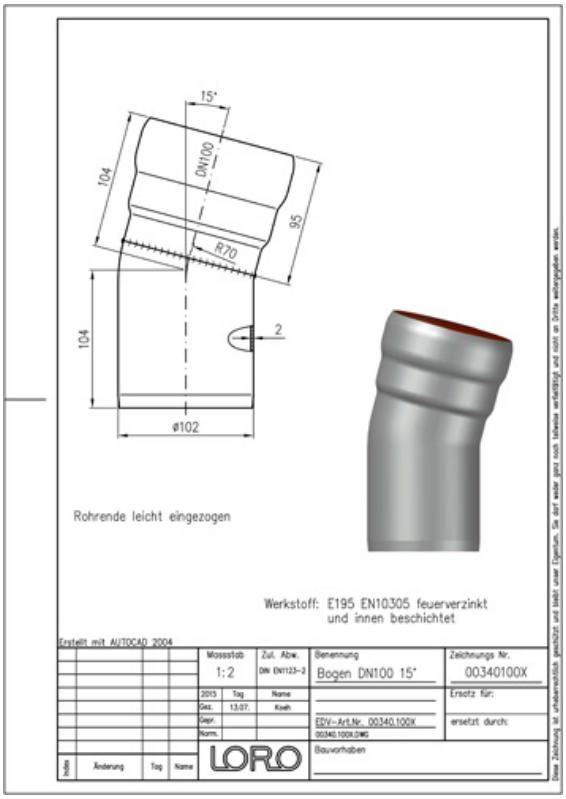

Artikkeldata

EAN-kode	**4038088019542**
ETIM-klasse	**EC003024**
Nominell diameter	**DN 100**
Nominell lengde/grad	**15**
Utvendige mål (HxBxL)	**118 x 133 x 219 mm**
Vekt	**1,20 Kg (STK)**
Produktgruppe	**1**
Tolltariffnummer	**73089098**
Materiale / Farge	**Stahl feuerverzinkt, Silber**

Bruksanvisning

Bei Verwendung von Sicherungsschellen am Spitzende des Bogens ist teilweise die Variante mit Ausklinkung zu verwenden.

Nedlastinger

Alles online

- Monteringsanvisning (PDF)
- Godkjenning (PDF)
- BIM 3D (STEP)
- BIM Revit (RFA)
- Måltegning (PDF)
- CAD 2D (DXF)
- BIM IFC4 (parametrisch)
- Brosjyre (PDF)
- CAD 3D (DWG)
- BIM 3D (IFC)