LORO-X BRANCH 70 DEGREE DN 150/150

LORO-X branch 70 degrees DN 150/150

Descriere

LORO-X branch, made of steel, hot-dip galvanized, in accordance with DIN EN 1123 with raised quality standard, with 2-chamber push-fit socket connection, building material class A1, dimensionally stable, break-proof, backflow-safe, long-life inside coating according to DIN EN ISO 2178 on the basis of a 2-component epoxy combination, colour: red-brown, 70 degrees, DN150

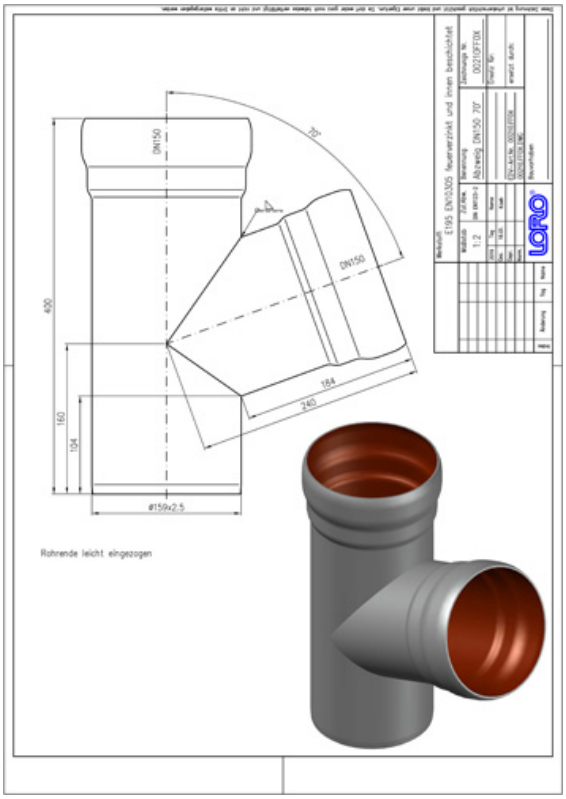

Date articol

Cod EAN	**4038088013410**
Clasă ETIM	**EC003025**
Diametru nominal	**DN 150, DN 150**
Lungime/grad nominal	**70**
Dimensiuni exterioare (ÎxLxA)	**181 x 346 x 400 mm**
Greutate	**5,40 Kg (STK)**
Grupă de produse	**1**
Număr tarif vamal	**73089098**
Material / Culoare	**Stahl feuerverzinkt, Silber**

Notă de utilizare

Die Buchstaben in den Artikelnummern von Abzweigen stehen für folgende Nennweiten: L = DN32, A = DN40, B = DN50, C = DN70, M = DN80, D = DN100, E = DN125, F = DN150, G = DN200, H = DN250, K = DN300

Descărcări

Alles online

Instrucțiuni de montaj (PDF)
Desen CAD (PDF)
Broșură (PDF)
Certificat (PDF)
CAD 2D (DXF)
CAD 3D (DWG)
BIM 3D (STEP)
BIM IFC4 (parametrisch)
BIM 3D (IFC)