LORO-X BRANCH 87 DEGREE DN 200/200

LORO-X branch 87 degrees DN 200/200

Descrição

LORO-X branch, made of steel, hot-dip galvanized, in accordance with DIN EN 1123 with raised quality standard, with 2-chamber push-fit socket connection, building material class A1, dimensionally stable, break-proof, backflow-safe, long-life inside coating according to DIN EN ISO 2178 on the basis of a 2-component epoxy combination, colour: red-brown, 87 degrees, DN200

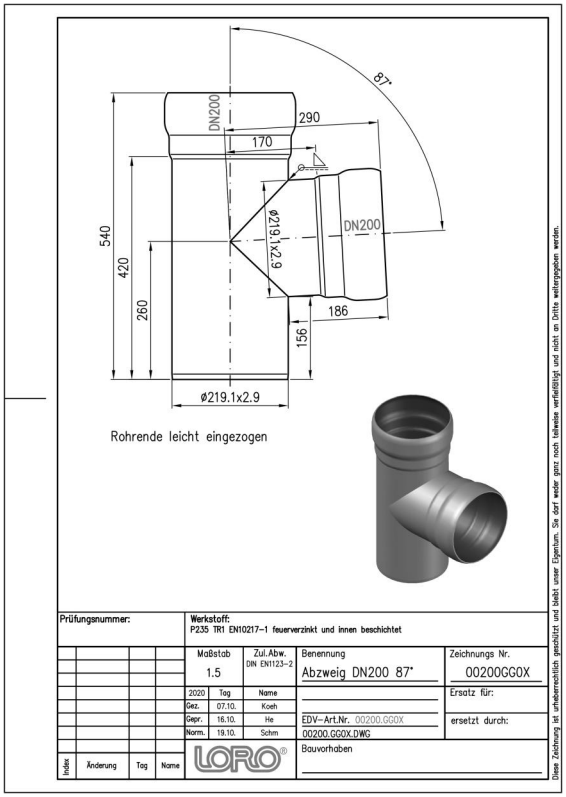

Dados do artigo

Código EAN	**4038088013267**
Classe ETIM	**EC003025**
Diâmetro nominal	**DN 200, DN 200**
Comprimento/grau nominal	**87**
Medidas exteriores (AxLxP)	**247 x 247 x 540 mm**
Peso	**10,90 Kg (STK)**
Grupo de produtos	**1**
Número de pauta aduaneira	**73089098**
Material / Cor	**Stahl feuerverzinkt, Silber**

Nota de utilização

Die Buchstaben in den Artikelnummern von Abzweigen stehen für folgende Nennweiten: L = DN32, A = DN40, B = DN50, C = DN70, M = DN80, D = DN100, E = DN125, F = DN150, G = DN200, H = DN250, K = DN300

Transferências

Alles online

Instruções de instalação (PDF)
Homologação (PDF)
BIM 3D (STEP)
Desenho cotado (PDF)
CAD 2D (DXF)
BIM IFC4 (parametrisch)
Brochura (PDF)
CAD 3D (DWG)
BIM 3D (IFC)