Installation Instruction

LORO-DRAINLET® Flat Roof Drains/Emergency Drains

for gravity flow, Series 84

with clamping flange, made of stainless steel, DN 50, DN 70, DN 100 and DN 125

LORO-DRAINJET® Siphonic Drains/Emergency Drains

for siphonic flow, Series 49

with clamping flange, made of stainless steel, DN 50, DN 70 and DN 100

System Overview

For Flat Roofs

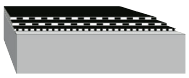
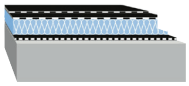

Series 84 (DL)	Series 84 (DL) Emergency drain	Series 49 (DJ)	Series 49 (DJ) Emergency drain
Version a: DN 50: 21511.050X, DN 70: 21511.070X, DN 100: 21511.100X, DN 125: 21511.125X **Version b:** DN 50: 21512.050X, DN 70: 21512.070X, DN 100: 21512.100X, DN 125: 21512.125X **Version c:** DN 50: 21513.050X, DN 70: 21513.070X, DN 100: 21513.100X, DN 125: 21513.125X	**Version a:** DN 50: 21711.050X, DN 70: 21711.070X, DN 100: 21711.100X **Version b:** DN 50: 21712.050X, DN 70: 21712.070X, DN 100: 21712.100X **Version c:** DN 50: 21713.050X, DN 70: 21713.070X, DN 100: 21713.100X	**Version a:** DN 50: 21111.050X, DN 70: 21111.070X, DN 100: 21111.100X **Version b:** DN 50: 21112.050X, DN 70: 21112.070X, DN 100: 21112.100X **Version c:** DN 50: 21113.050X, DN 70: 21113.070X, DN 100: 21113.100X	**Version a:** DN 50: 21311.050X, DN 70: 21311.070X, DN 100: 21311.100X **Version b:** DN 50: 21312.050X, DN 70: 21312.070X, DN 100: 21312.100X **Version c:** DN 50: 21313.050X, DN 70: 21313.070X, DN 100: 21313.100X
Version a: DN 50: 21521.050X, DN 70: 21521.070X, DN 100: 21521.100X, DN 125: 21521.125X **Version b:** DN 50: 21522.050X, DN 70: 21522.070X, DN 100: 21522.100X, DN 125: 21522.125X **Version c:** DN 50: 21523.050X, DN 70: 21523.070X, DN 100: 21523.100X, DN 125: 21523.125X	**Version a:** DN 50: 21721.050X, DN 70: 21721.070X, DN 100: 21721.100X **Version b:** DN 50: 21722.050X, DN 70: 21722.070X, DN 100: 21722.100X **Version c:** DN 50: 21723.050X, DN 70: 21723.070X, DN 100: 21723.100X	**Version a:** DN 50: 21121.050X, DN 70: 21121.070X, DN 100: 21121.100X **Version b:** DN 50: 21122.050X, DN 70: 21122.070X, DN 100: 21122.100X **Version c:** DN 50: 21123.050X, DN 70: 21123.070X, DN 100: 21123.100X	**Version a:** DN 50: 21321.050X, DN 70: 21321.070X, DN 100: 21321.100X **Version b:** DN 50: 21322.050X, DN 70: 21322.070X, DN 100: 21322.100X **Version c:** DN 50: 21323.050X, DN 70: 21323.070X, DN 100: 21323.100X

For box gutters

Series 84 (DL)	Series 84 (DL) Emergency drain	Series 49 (DJ)	Series 49 (DJ) Emergency drain
Version a: DN 50: 21511.050X, DN 70: 21511.070X, DN 100: 21511.100X, DN 125: 21511.125X **Version b:** DN 50: 21512.050X, DN 70: 21512.070X, DN 100: 21512.100X, DN 125: 21512.125X **Version c:** DN 50: 21513.050X, DN 70: 21513.070X, DN 100: 21513.100X, DN 125: 21513.125X	**Version a:** DN 50: 21711.050X, DN 70: 21711.070X, DN 100: 21711.100X **Version b:** DN 50: 21712.050X, DN 70: 21712.070X, DN 100: 21712.100X **Version c:** DN 50: 21713.050X, DN 70: 21713.070X, DN 100: 21713.100X	**Version a:** DN 50: 21111.050X, DN 70: 21111.070X, DN 100: 21111.100X **Version b:** DN 50: 21112.050X, DN 70: 21112.070X, DN 100: 21112.100X **Version c:** DN 50: 21113.050X, DN 70: 21113.070X, DN 100: 21113.100X	**Version a:** DN 50: 21311.050X, DN 70: 21311.070X, DN 100: 21311.100X **Version b:** DN 50: 21312.050X, DN 70: 21312.070X, DN 100: 21312.100X **Version c:** DN 50: 21313.050X, DN 70: 21313.070X, DN 100: 21313.100X

Version a = without thermal insulation, Version b = with thermal insulation, Version c = with thermal insulation and heating

Trace heating

Lorowerk recommends to check all drains and pipes with regard to their frost-sensibility. Where necessary, these parts should be equipped with a trace heating (see DIN EN 12056, part 1, or DIN 1986, part 100).

This installation instruction can also be used for flat roof emergency drains!

a.) Installation in a concrete roof

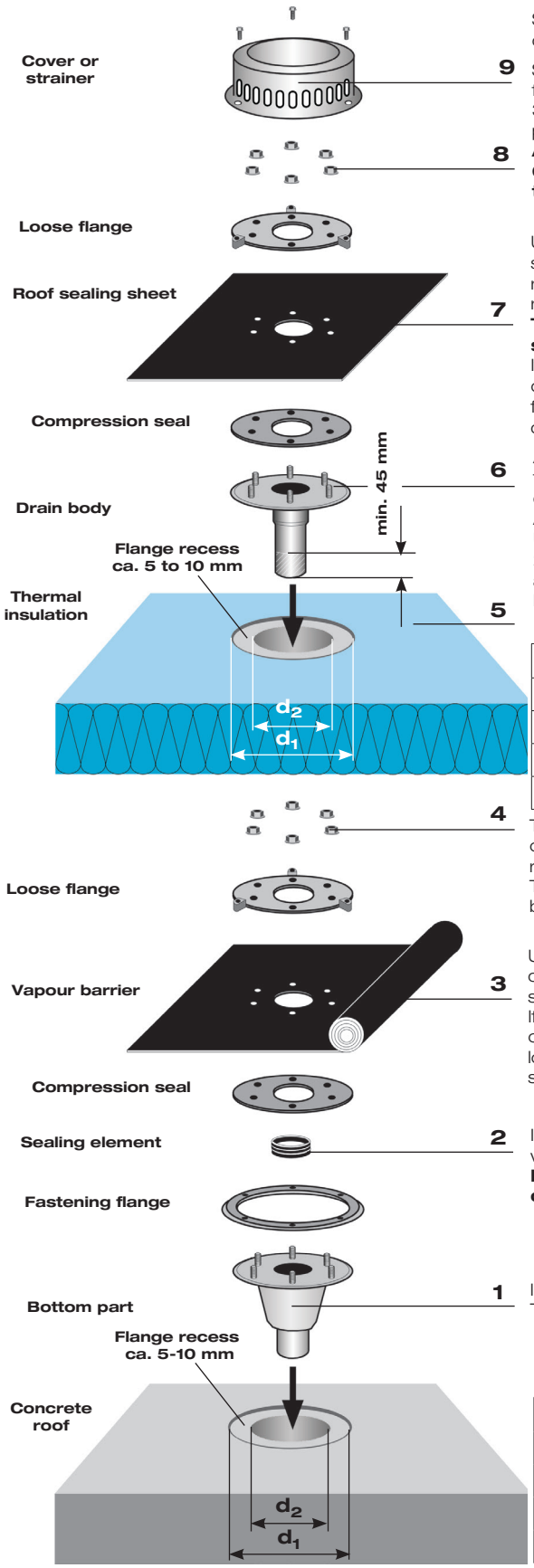

Screw the cover or strainer to the loose flange using the 3 fastening screws included. Hand-tight fastening up to max. 5 Nm.

Screw the loose flange to the drain body using the six M 10(SW15) hexagonal flange nuts included. Tightening torque: 20 Nm (bituminous roof sealing sheet) or 30 Nm (plastic roof sealing sheet). Remove all parts of the sealing sheet that protrude into the inlet area.
According to the specialist guideline for sealings (Flat Roof Guideline, Version 2026) the nuts of the flange connections have to be tightened 3x.

Use the loose flange as template for the holes to be made in the roof sealing sheet. The compression seal has to be positioned on the fixed flange under the roof sealing sheet. A compression seal for bituminous roof sealing sheets is not required. Bituminous sealings have be installed two-layered in the clamping area.
The processing guidelines provided by the manufacturer of the roof sealing sheet have to be observed.
If a second compression seal is required under the loose flange, this can be made on site from the same material as the roof sealing sheet. For this purpose, the loose flange can be used as a template again. Alternatively, a second compression seal can be requested from the LOROWERK.

Apply lubricant to the outlet end of the drain body and push it through the thermal insulation into the sealing element of the bottom part. Check that the connection to the bottom part has been established correctly.
Adjusting range of the drain body: 35 - 200 mm.
Use a LORO-X pipe as extension if the thermal insulation is more than 200 mm thick. The discharge pipe of the drain body has to be shortened appropriately if the thermal insulation is less than 150 mm thick.
Required minimum insertion: 45 mm.

Cut-out dimensions for the thermal insulation:

DN	d_1	d_2
50	260	122
70	260	122
100	320	142
125	340	172

Tighten the loose flange with the enclosed hexagonal flange nuts using a socket or open-end wrench SW 15, starting on the flange side at 45°. Then tighten the remaining hexagonal flange nuts on the opposite side.
Tightening torque: 20 Nm (bitumen vapour barrier) or 30 Nm (plastic vapour barrier).

Use the loose flange as template for the holes to be made in the vapour barrier. The compression seal has to be positioned on the fixed flange under the vapour barrier sheet. A compression seal for bituminous vapour barrier sheets is not required.
If a second compression seal is required under the loose flange, this can be made on site from the same material as the vapour barrier sheet. For this purpose, the loose flange can be used as template again. Alternatively, a second compression seal can be requested from the LOROWERK.

Insert the LORO-X sealing element into the socket of the bottom part and coat the whole area with LORO-X lubricant.
Note: Make sure that the sealing element is positioned properly in order to ensure backflow-safety.

Insert the bottom part and fasten it by using e.g. fastening flange no. 21910X. This article is not included in the standard delivery. Please order separately.

For concrete roofs

DN	d_1	d_2
50	260	122/158*
70	260	122/158*
100	320	142/200*
125	340	172/230*

* Tapping hole for LORO-DRAINLET®/DRAINJET® bottom part with thermal insulation (two-piece).

b.) Installation in a trapezoidal sheet metal roof

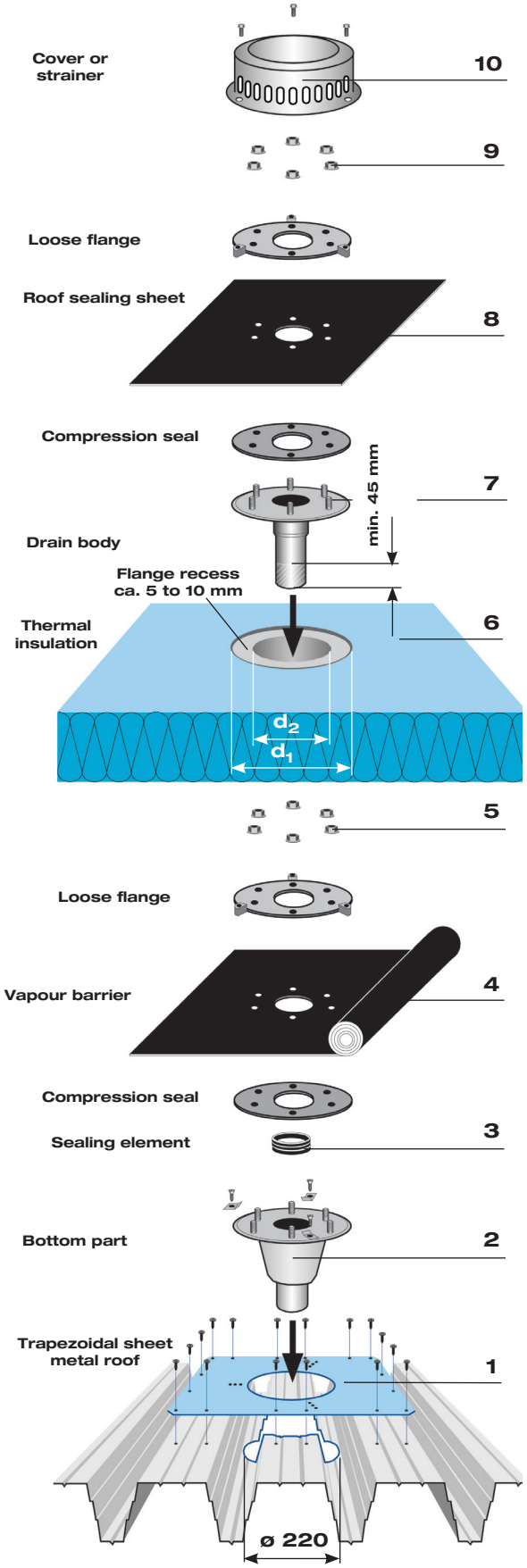

Screw the cover or strainer to the loose flange using the 3 fastening screws included. Hand-tight fastening up to max. 5 Nm.

Screw the loose flange to the drain body using the six M 10(SW15) hexagonal flange nuts included. Tightening torque: 20 Nm (bituminous roof sealing sheet) or 30 Nm (plastic roof sealing sheet). Remove all parts of the sealing sheet that protrude into the inlet area.
According to the specialist guideline for sealings (Flat Roof Guideline, Version 2026) the nuts of the flange connections have to be tightened 3x.

Use the loose flange as template for the holes to be made in the roof sealing sheet. The compression seal has to be positioned on the fixed flange under the roof sealing sheet. A compression seal for bituminous roof sealing sheets is not required. Bituminous seals have to be installed two-layered in the clamping area. **The processing guidelines provided by the manufacturer of the roof sealing sheet have to be observed.**
If a second compression seal is required under the loose flange, this can be made on site from the same material as the roof sealing sheet. For this purpose, the loose flange can be used as a template again. Alternatively, a second compression seal can be requested from the LOROWERK.

Apply lubricant to the outlet end of the drain body and push it through the thermal insulation into the sealing element of the bottom part. Check that the connection to the bottom part has been established correctly.
Adjusting range of the drain body: 35 - 200 mm.
Use a LORO-X pipe as extension if the thermal insulation is more than 200 mm thick. The discharge pipe of the drain body has to be shortened appropriately if the thermal insulation is less than 150 mm thick.
Required minimum insertion: 45 mm.

Cut-out dimensions for the thermal insulation:

DN	d_1	d_2
50	260	122
70	260	122
100	320	142
125	340	172

Tighten the loose flange with the enclosed hexagonal flange nuts using a socket or open-end wrench SW 15, starting on the flange side at 45°. Then tighten the remaining hexagonal flange nuts on the opposite side.
Tightening torque: 20 Nm (bitumen vapour barrier) or 30 Nm (plastic vapour

Use the loose flange as template for the holes to be made in the vapour barrier. The compression seal has to be positioned on the fixed flange under the vapour barrier sheet. A compression seal for bituminous vapour barrier sheets is not required.
If a second compression seal is required under the loose flange, this can be made on site from the same material as the vapour barrier sheet. For this purpose, the loose flange can be used as template again. Alternatively, a second compression seal can be requested from the LOROWERK.

Insert a LORO-X sealing element into the socket of the bottom part and coat the whole area with LORO-X lubricant.
Note: Make sure that the sealing element is seated properly in order to ensure backflow-safety.

Insert the lower part and fix it using the on-site lugs. Alternatively: reinforcing plate Art. No. 19975X or fastening flange No. 21910X,use. These articles are not included in the standard scope of delivery. Please order separately.

Screw the reinforcing metal sheet to the trapezoidal sheet metal roof according to DIN 18807 Part 3 Example “a”. The reinforcing metal sheet, Art.-No. 19975.000X, is not included in the standard scope of delivery. Please order separately.

c.) Installation in a box gutter

LORO-DRAINLET®/DRAINJET® flat roof drains,
DN 50, DN 70, DN 100 and DN 125,
for installation in box gutters

Make holes (ø 16 mm) according to the pattern in the box gutter.
The loose flange can be used as template for the holes.
When installing the drain, make sure that the threaded bolts are located in the centre of the pre-punched holes.
Note: The longitudinal expansion of the gutter has be taken into account.
Note: If the box gutter is made of copper, a second compression seal has to be ordered at the LOROWERK. This seal is clamped with the loose flange in the gutter.

Screw the cover or strainer to the loose flange using the 3 fastening screws included. Hand-tight fastening up to max. 5 Nm. Screw the loose flange to the drain body using the six M 10 hexagonal flange nuts included. Tightening torque: 20 Nm.

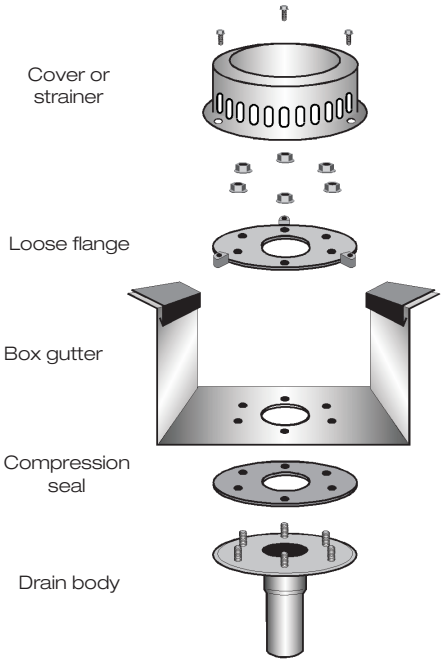

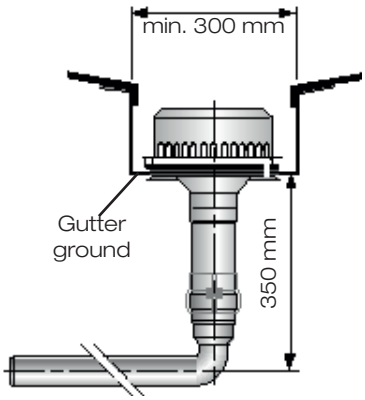

DRAINLET®

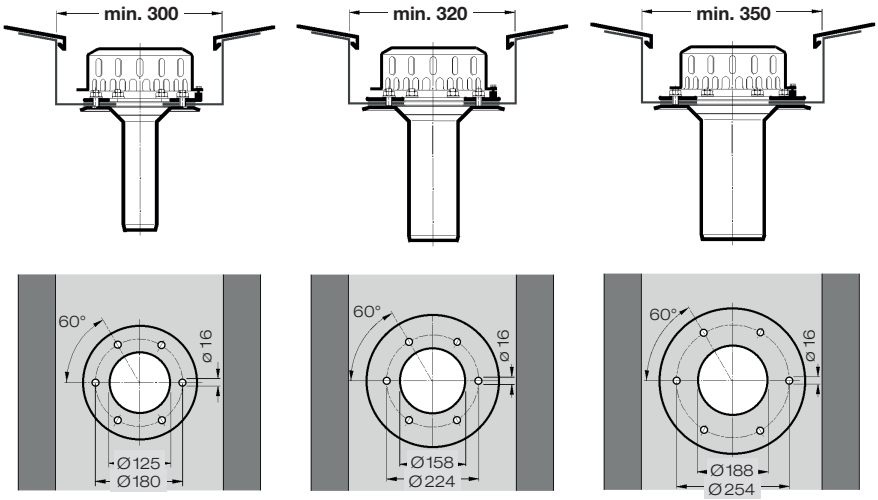

DN 70 **DN 100** **DN 125**

DRAINJET®

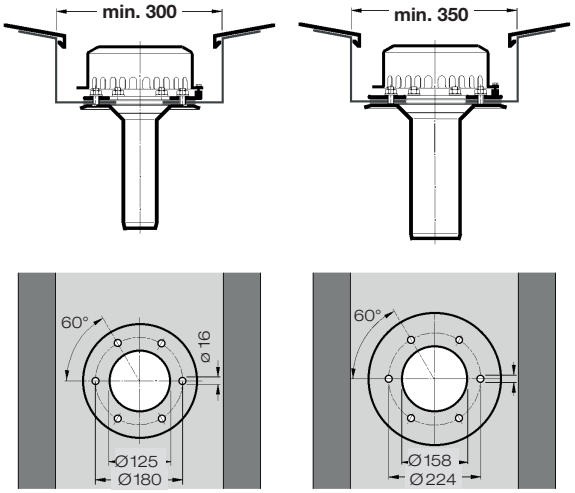

DN 70 **DN 100**

Flat roof drains are to be serviced in accordance with DIN 1986, Part 30.
Environmental influences have to be taken into account additionally.
Please also give this installation instruction to the plumber!

Installation Instruction

LORO-DRAINLET® Flat roof drains

with clamping flange, for inverted roofs

made of stainless steel, for bituminous or plastic roof sealing sheets,
DN 50, DN 70, DN 100 and DN 125

Setup diagramm

Strainer unit
1) for installation height 210 mm
No. 19495X
2) for installation height 495 mm
No. 19496X

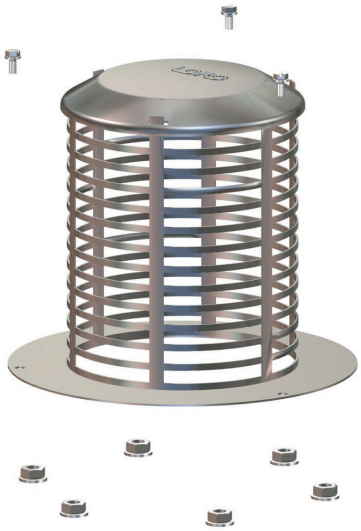

Version 1

Version 2

Bottom part unit*
vertical runoff,
without thermal insulation
No. 21991X
with thermal insulation
No. 21992X
with thermal insulation
and heating
No. 21993X

* Including compression seal made of perbunan. Can be omitted when using bituminous roof sealing sheets.

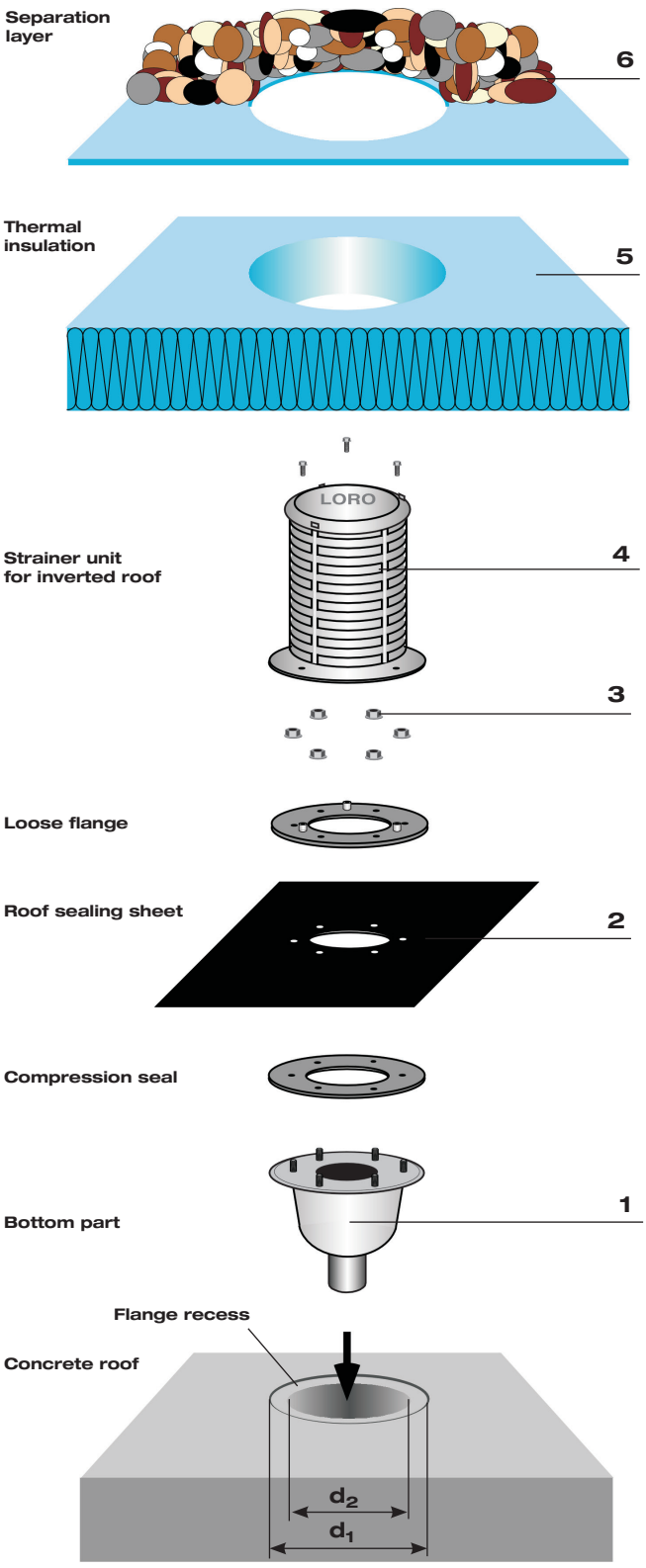

Installation in inverted roof

Create a recess in the separation layer and lay it down on the thermal insulation. Put the gravel closely around the strainer unit.

Create a conical recess in the thermal insulation and position it on the strainer unit.

Screw the strainer unit for inverted roofs to the loose flange using the 3 fastening screws included. Hand-tight fastening up to max. 5 Nm.

Screw the loose flange to the drain body using the six M 10 hexagonal flange nuts included. Tightening torque: 20 Nm (bituminous roof sealing sheet) or 30 Nm (plastic roof sealing sheet). Remove all parts of the sealing sheet that protrude into the inlet area.
According to the specialist guideline for sealings (Flat Roof Guideline, Version 2026) the nuts of the flange connections have to be tightened 3x. The last tightening should take place after 24 hours the earliest.

Use the loose flange as template for the holes to be made in the roof sealing sheet. The compression seal has to be positioned on the fixed flange under the roof sealing sheet. A compression seal for bituminous roof sealing sheets is not required. Bituminous seals have to be installed two-layered in the clamping area. **The processing guidelines provided by the manufacturer of the roof sealing sheet have to be observed.**
If a second compression seal is required under the loose flange, this can be made on site from the same material as the roof sealing sheet. For this purpose, the loose flange can be used as template again. Alternatively, a second compression seal can be requested from the LOROWERK.

Position the bottom part in the ceiling recess and fasten it. If possible, the flange should be inserted into the bottom layer.

For concrete roof

DN	d_1	d_2
50	260	122/158*
70	260	122/158*
100	320	142/200*
125	340	172/230*

* Tapping hole for LORO-DRAINLET®/DRAINJET® bottom part with thermal insulation (two-piece version).

Trace heating

Lorowerk recommends to check all drains and pipes with regard to their frost-sensibility. Where necessary, these parts should be equipped with a trace heating (see DIN EN 12056, part 1, or DIN 1986, part 100).