Specification sheet LX 2254

Roof Drainage
Series LORO-X Light
Flange stainless steel/composite sheet

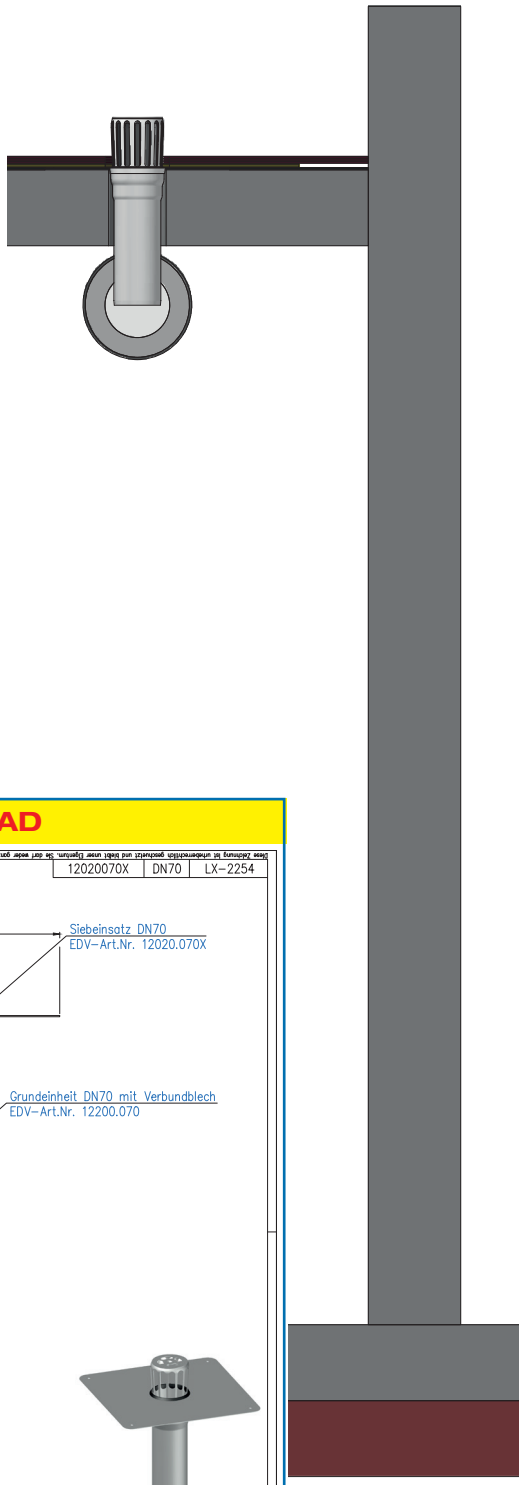

Main drainage

Gravity flow

Silent Power

Discharge rate:	2,1 l/s
Water height:	35 mm
Roof penetration:	-
Diameter:	DN 70
LX-Number:	LX 2254
Weir height:	0 mm
Drain:	ventilated
Downpipe:	ventilated
Downpipe height:	-
Drainage:	into the open

LX 2254 Piece list
1 x Art.-No. Choose drain on page 2!

hQ - Discharge curve

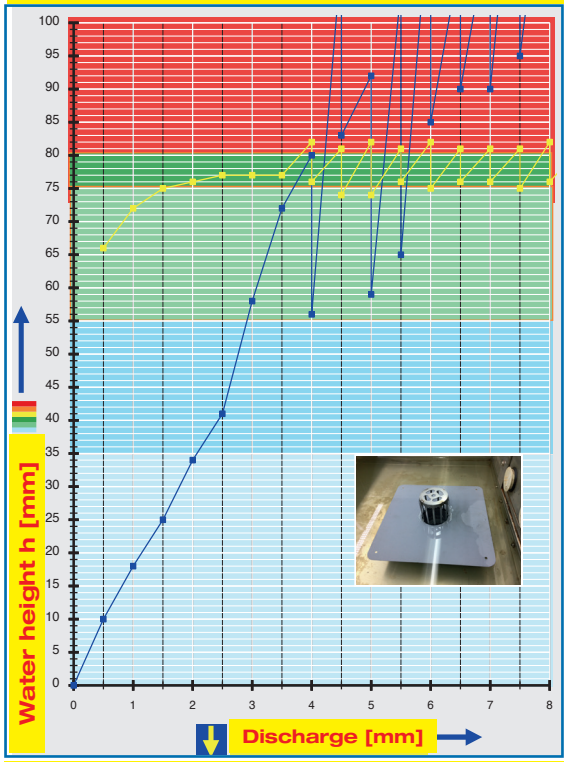

System power

CAD

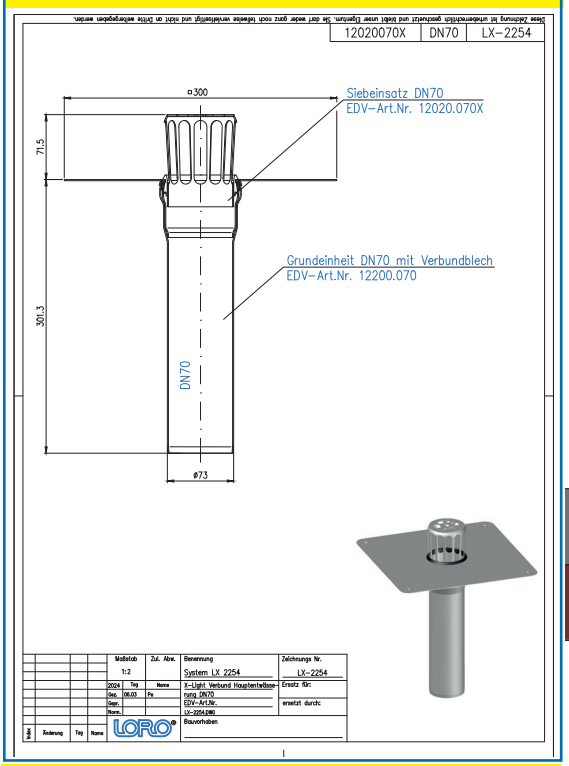

System shape

Water height	mm	10	15	20	25	30	35	40	45	50	55	60	65	70	75	80	85
Discharge	l/s	0,5	0,8	1,2	1,5	1,8	2,1	2,4	2,6	2,8	2,9	3,1	3,2	3,4	3,7	4,0	4,3
			Silent Power														

Please choose the respective base unit and bottom unit!

DN 70

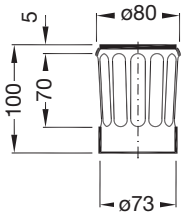

Drain
Main drainage
Art.-No. 12020.070X

Flange made of stainless steel

without thermal insulation:

LX2254-20X

one-piece
base unit, vertical
300 x 300 No. 12100.070X

with thermal insulation:

LX2254-20X

one-piece
base unit, vertical
300 x 300 No. 12100.070X
and thermal insulation No. 19842.070X

Flange made of stainless steel

without thermal insulation:

LX2254-20X

two-piece
base unit, vertical
300 x 300 No. 12100.070X
bottom unit, vertical
No. 12101.070X

with thermal insulation:

LX2254-20X

two-piece
base unit, vertical
300 x 300 No. 12100.070X
bottom unit, vertical
No. 12101.070X
und Wärmedämmung No. 19842.070X

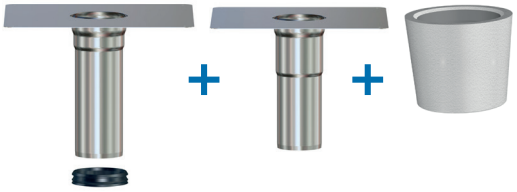

Flange made of composite sheet

Base unit with composite sheet
293 x 293 mm, No. 12200
Factory pre-assembled composite sheets available.

Art.-Nr.	Hersteller	Bezeichnung	Basis	Farbe
12200.070E	Bauder	Thermofol	PVC	anthracite
12200.070G	ALWITRA	Evalon	EVA	slate grey
12200.070H	Sika	Sikaplan	PVC	light grey
12200.070I	FDT	Rhepanol	PIB	grey
12200.070J	Wolfin	Tectofin	PVC	grey
12200.070K	Sika	Sarnafil	FPO	basalt grey
12200.070L	Bauder	Thermoplan	FPO	silver grey
12200.070M	FDT	Rhenofol	PVC	light grey

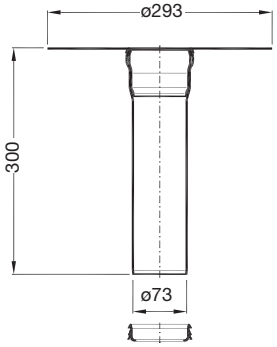

Heat tracing: Lorowerk recommends to check all drains and pipes with regard to their frost-sensibility. Where necessary, these parts should be upgraded with heat tracing.