LORO News

LORO-X
Roof Drainage Systems

New in the LORO product range 2025:

LORO-X Light
Drains, with flange made of composite sheet, DN 70 as main and emergency drain

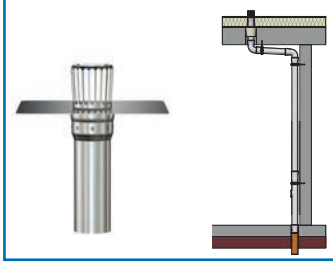

LORO-X
Balcony emergency drainage
Setup elements, DN 50, DN 70 and DN 100

LORO-X
Renovation sealing elements for installed drains or pipes

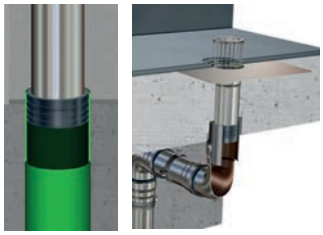

LORO-X
ETICS Pipe socket

- with cleaning cover
- high performance safety overflow

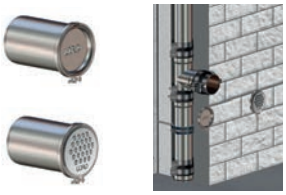

LORO-X
Parapet drainage
rectangular spout, with bonding flange

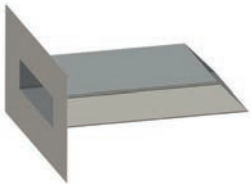

LORO-X
Balcony drainage
Series H,
with new drainage ring, DN 70 and DN 100

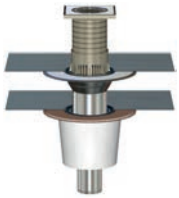

LORO-X
Balcony drainage
Series V, DN 50

LORO-X DRAINJET®
Emergency drainage with height adjustable weir,
DN 50, DN 70 and DN 100

LORO-X VARIOFIT
Multiple pipe penetrations

30.01.2025

www.loro-x.com

The LORO quality promise:
Optimal drainage with maximum safety!

The LOROWERK in Bad Gandersheim was able to look back on 70 years of company history on 1 June 2024. During this time, the company has become synonymous with steel drainage pipes and has established itself as a technology-leading provider of roof and balcony drainage systems thanks to numerous new patents.

The first building authority approval for a hot-dip galvanised steel drainage pipe with push-fit socket connection for finances in 1954 marked the start of the industrial production of pipes with the LORO-X push-fit socket principle. This initially took place at Loges-Rohr OHG E.+ K. Vahlbrauk in Alfeld (Leine), later at today's LOROWERK K.H. Vahlbrauk GmbH & Co. KG in Bad Gandersheim.

LORO currently develops, produces and sells high-performance LORO-X balcony and roof drainage systems made of steel and stainless steel - from the LORO-X roof drain to the LORO-X steel drainage pipe system and the LORO-X rain standpipe. This opened up access to new markets in the roofing industry in addition to the classic sanitary market.

The LORO-X product advantages:

stainless

backflow-proof

unbreakable

UV-resistant

standardised + fire protection tested

easy to install

reliable planning

compatible + system-optimised

environmetally friendly production

restorable

CE **5 years** manufacturer's warranty

Made in Germany

TÜVRheinland ZERTIFIZIERT — Bauart geprüft und überwacht — www.tuv.com ID 1111248795

TÜV NORD — DIN EN ISO 9001

The LOROWERK in Bad Gandersheim

LORO employees 1966

Contents

	Page
New products	
LORO-X Light Composite sheet drains, with flange made of composite sheet, for plastic sheets, DN 70 as main and emergency drain	4-7
LORO-X Balcony emergency drainage setup elements, DN 50, DN 70 and DN 100	8-11
LORO-X Renovation sealing elements universally applicable for many pipe diameters and installed drain base bodies	12-13
LORO-X ETICS Sockets for the extension of cleaning cover and high performance safety overflow	14-15
LORO-X Rectangular spout with bonding flange 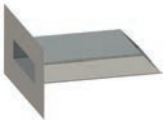	16-17
LORO-X Balcony direct drains Series H, DN 70 and DN 100, with new drainage ring	18-21
LORO-X Balcony drains Series V, DN 50	22-27
LORO-X Fittings	29
LORO-X DRAINJET® emergency drainage, with height adjustable weir, DN 50, DN 70 and DN 100	30-31
LORO-X VARIOFIT Mulitiple pipe penetrations variable and precisely tailored to customer requirements - For minimal spacing between pipes	32-33
Service	34
Sustainability	35
Contact	36

News 1: LORO-X Light Composite sheet drains, for small roof areas

with flange made of composite sheet, DN 70

Version with composite sheet flange

for plastic sealing sheets

LORO-X Light drains with a factory-fitted composite sheet flange are available for easy bonding to plastic sealing sheets. Due to the generous dimensions of 300 x 300 mm, the minimum overlap of 30 mm is exceeded and bonding can be done easily carried out with a hot air dryer.
Optionally, to each composite sheet type a factory pre-punched connecting sleeve can be ordered to connect the composite sheet flange with the sheeting in a professional manner. The time-consuming cutting to size on the construction site and the connection details always look perfectly cut for the client.

- With composite sheet flange to match the sealing sheet
- With pre-punched connecting sleeve
- Easy sealing with hot air dryer

Easy installation with hot air dryer

EDELSTAHL Rost frei

Made in Germany

Applicable in the following areas:

- Carports
- Canopies
- Balconies
- Garages
- House extensions

Application example: Building extension

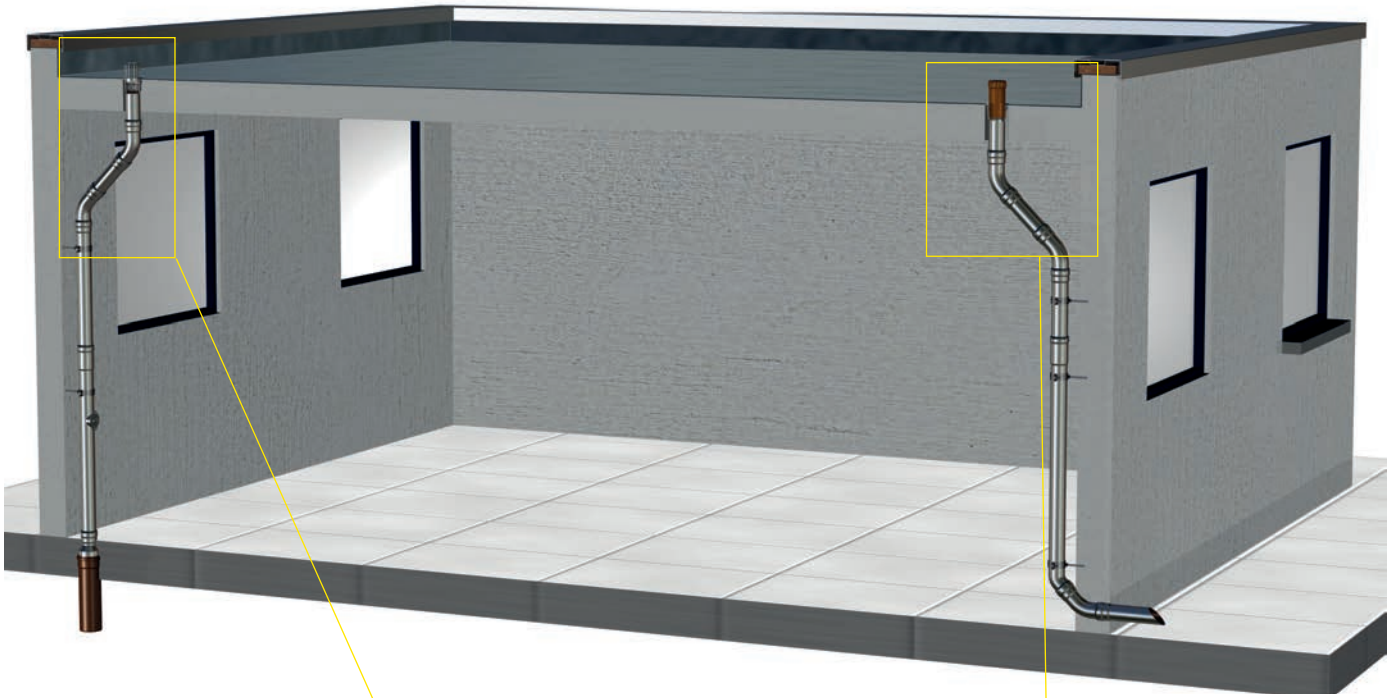

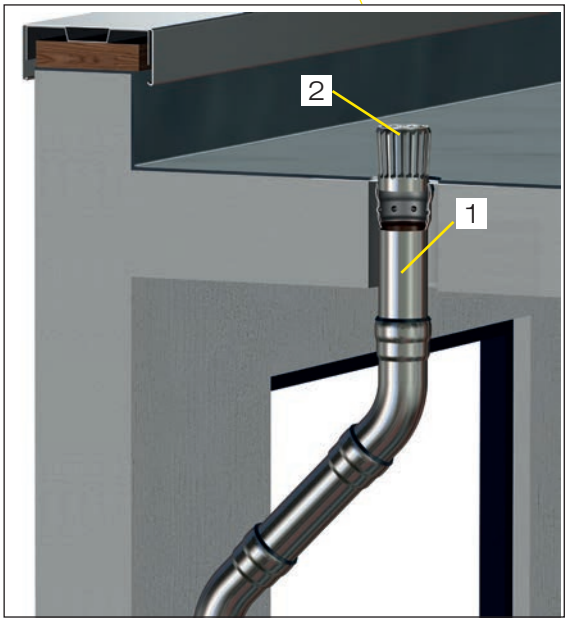

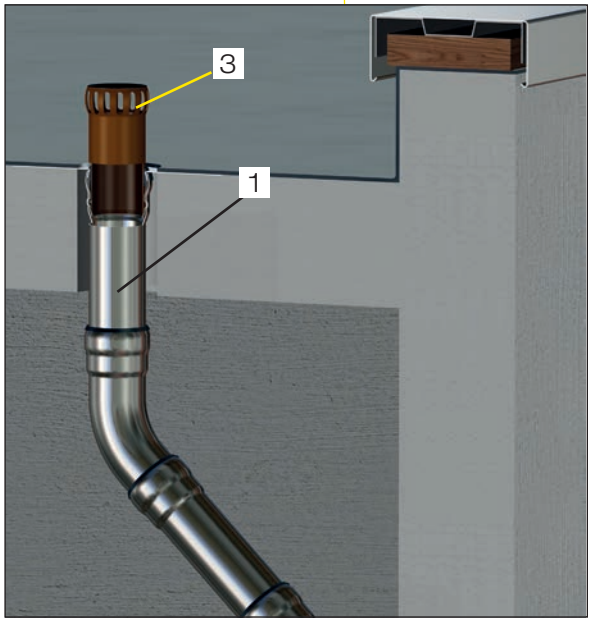

Klick mich!

Pos.	Name	Art.-No.
1	LORO-X Light Base unit with composite sheet	12200.070
2	LORO-X Light Base unit with composite sheet	12200.070
3	LORO-X Light Cover for emergency drainage	12026.070X

1

Setup diagram/system components

Series LORO-X Light Composite Sheet Drains:
Flat roof drains

DN 70 flange made of composite sheet, for plastic waterproofing

Main drainage

Cover
Main drainage
Art.-No. 12020.070X

Emergency drainage

Cover
Emergency drainage
Art.-No. 12026.070X

for
plastic sheets

Base unit with composite sheet
293 x 293 mm, No. 12200
Factory pre-assembled composite sheets available.

Art.-No.	Producer	Name	Basis	Colour
12200.070E	Bauder	Thermofol	PVC	Anthracite
12200.070G	ALWITRA	Evalon	EVA	slate-grey
12200.070H	Sika	Sikaplan	PVC	light grey
12200.070I	FDT	Rhepanol	PIB	grey
12200.070J	Wolfin	Tecofin	PVC	grey
12200.070K	Sika	Sarnafil	FPO	basalt grey
12200.070L	Bauder	Thermoplan	FPO	silver-grey
12200.070M	FDT	Rhenofol	PVC	light grey

One-piece version

Two-piece version

Bottom unit,
vertical,
without thermal insulation,
made of stainless steel
Art.-No. 12101.070X
flange 300 x 300 mm

Bottom unit,
vertical,
without thermal insulation,
with clamping flange
Art.-No. 21991.070X

Bottom unit,
runoff 3°,
without thermal insulation
made of stainless steel
Art.-No. 12102.070X
flange 300 x 300 mm

Bottom unit,
runoff 3°,
without thermal insulation
with clamping flange
Art.-No. 21994.070X

LORO-X Light Composite sheet drains
with flange made of composite sheet, DN 70
setup diagram see page 6

Sub-units for modular-based completion purposes

LORO-X Light Base unit with composite sheet, vertical
consisting of: drain body and sealing element

made of stainless steel, different composite sheets see page 6	12200.070	
	•	

LORO-X Light Bottom unit, vertical

made of stainless steel, flange 300 x 300 mm	12101.070X	
	•	

Bottom unit DL, Series 84,
with clamping flange, consisting of: bottom part, loose flange, sealing element and compression sealing

without thermal insulation	21991.070X	
	•	

LORO-X Light Bottom unit, horizontal

made of stainless steel, flange 300 x 300 mm	12102.070X	
	•	

Bottom unit DL, Series 84, horizontal
with clamping flange, consisting of: bottom part, loose flange, sealing element and compression sealing

without thermal insulation	21994.070X	
	•	

Cover for main drainage

made of stainless steel	12020.070X	
	•	

Cover for emergency drainage

consisting of strainer support and sealing element, made of stainless steel	12026.070X	
	•	

2 News 2: LORO-X Balcony drainage, Setup element for balcony emergency drainage,
for Series I, IK, IV, GF, GS and V, DN 50, DN 70 and DN 100

Advantages:
- Emergency drainage as single or direct drainage
- For many Series of the LORO-X balcony drainage
- Backflow-proof due to tested slip ring seal
- Emergency drain insert at the low point
- Stackable for different water levels

LORO Setup element for balcony emergency drainage

		DN 50	DN 70	DN 100
		16189.050X	16189.070X	16189.100X
		●	●	●

Strainers, made of stainless steel

		DN 50	DN 70	DN 100
	with pipe penetration, for balcony floors	16193.050X	16193.070X	16193.100X
		●	●	●
	without pipe penetration, for upper balconies	16191.050X	16191.070X	16191.100X
		●	●	●

* for strainer, DN 70, without pipe penetration, 16191.070X

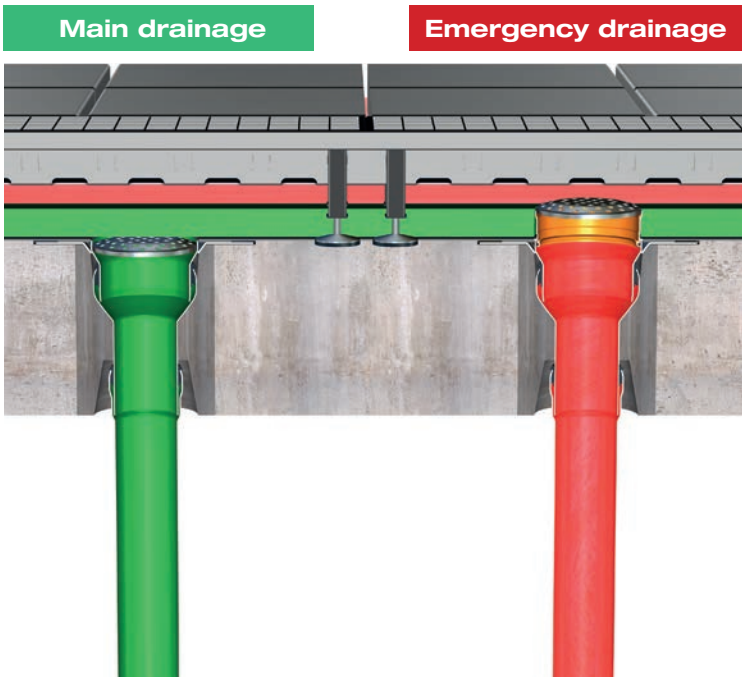

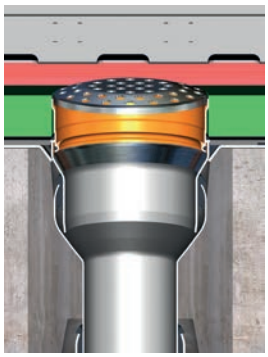

Application example

LORO Setup element for balcony emergency drainage,
for Series I, IK, IV, GF GS and V, DN 50, DN 70 and DN 100

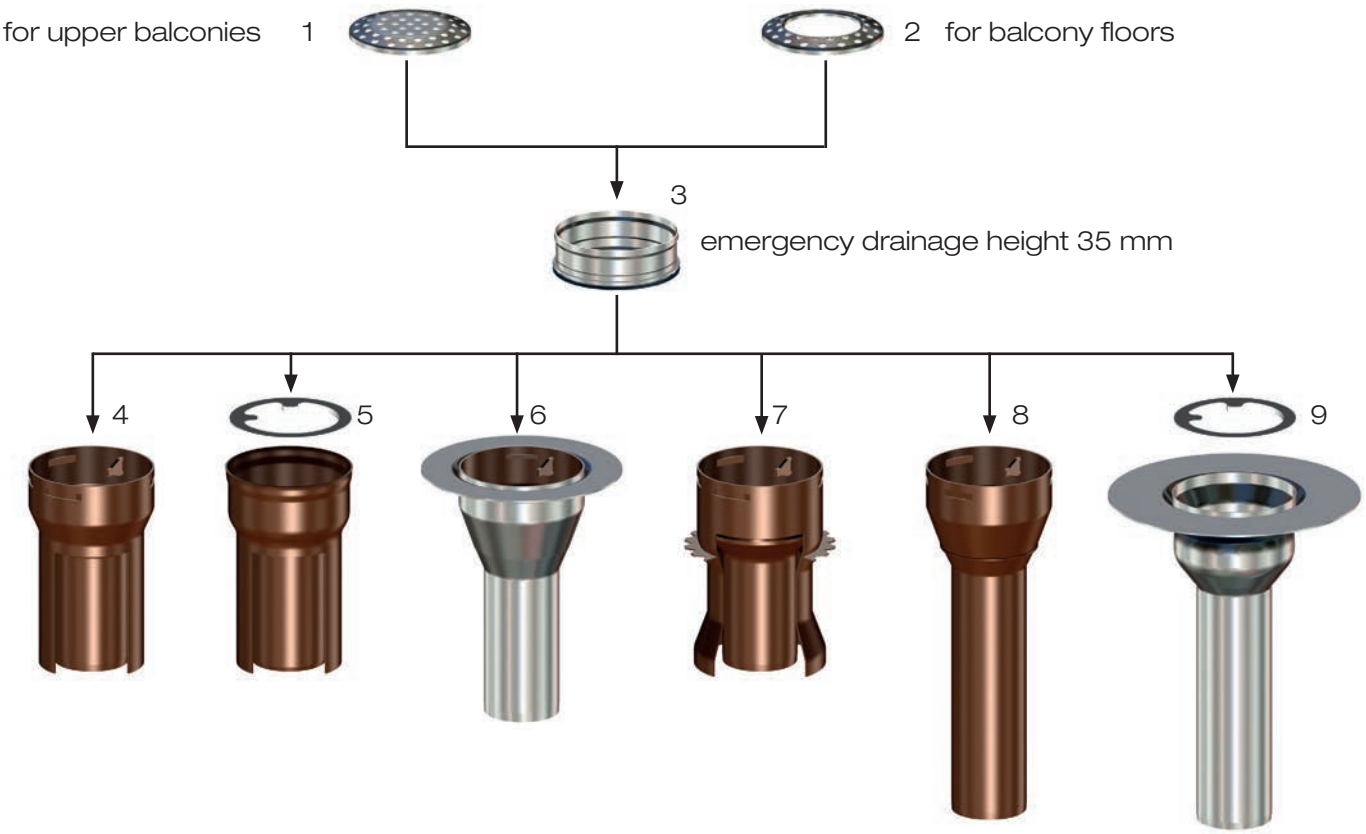

Klick mich!

Pos.	Name	Art.-No.
1	Strainer for upper balconies	16191X
2	Strainer for balcony floors	16193X
3	LORO-X Setup element for the emergency drainage	16189X
4	LORO-X Balcony direct drain with dome Series I	acc. to plate thickness
5	LORO-X Balcony direct drain with dome Series IV	acc. to plate thickness
6	LORO-X Balcony direct drain with supporting edge, Series GF	16110X
7	LORO-X Balcony direct drain with clamping collar, Series IK	acc. to plate thickness
8	LORO-X Balcony direct drain without supporting edge, Series GS	16115X
9	LORO-X Balcony drain, Series V	

Application Example

Setup element for balcony emergency drainage, with balcony drain Series V

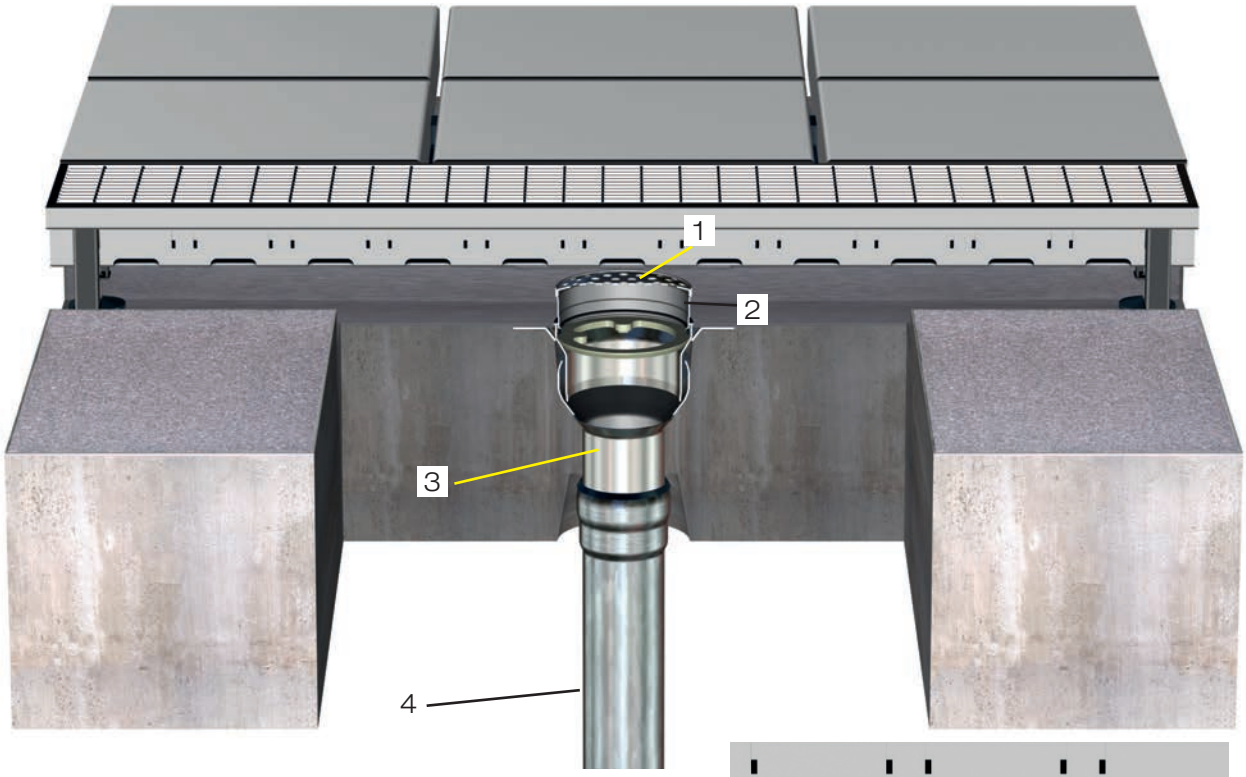

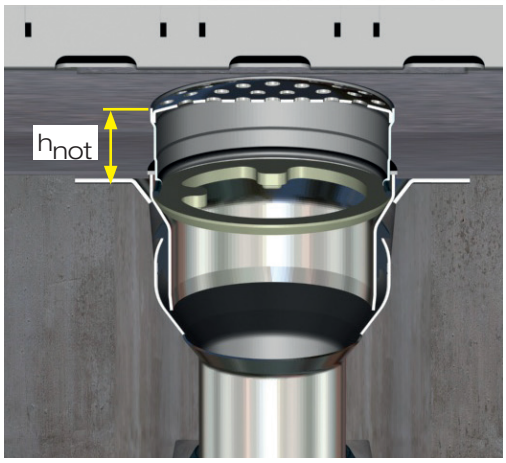

h_{not} - Starting height of the emergency drainage

h_{not} = 35 mm

Klick mich!

Pos.	Name	Art.-Nr.
1	Strainer for upper balconies	16191X
	Strainer for balcony floors	16193X
2	LORO-X setup element for the emergency drainage	16189X
3	LORO-X balcony drain series V	plate thickness
	- Set up element, Series V-FL	20420X
	- Base body Serie V	21210X
	- Aufnahmering	18101X
4	Further LORO-X pipe	acc. to pipe length

Installation instructions

1. Clean the drain and deburr if necessary. Remove any concrete residue.

2. Apply original LORO-X lubricant to the sealing ring of the setup element and the insert area on the drain.

3. Place the setup element at an angle to the drain and insert it evenly into the drain.

Application example 1:
Series I with dome
with retaining cams for the installation of the downpipe between two fixed points

Application example 2:
Series IV with dome
with flexibly positionable support ring instead of fixed retaining cams

Application example 3:
Series V
with bonding flange

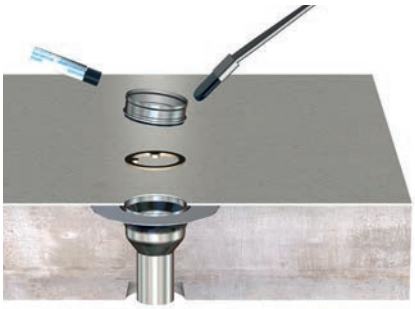

Strainer
for upper balconies

for balcony floors

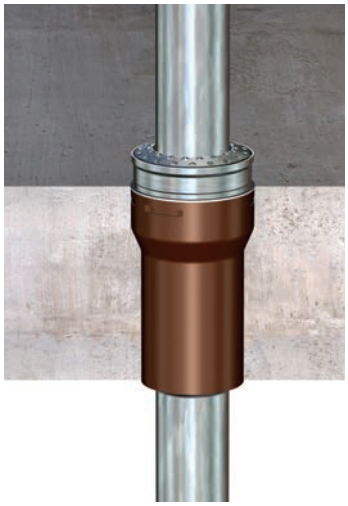

For higher balcony structures, the setup elements can be sacked. Maximum of 5 setup elements on top of each other.

3 News 3: LORO-X Renovation sealing elements, DN 40, DN 50, DN 70, DN 80, DN 100, DN 125 and DN 150

Advantages:
- Can be used universally for many common pipe diameters and existing drain base bodies
- For all vertical LORO-X roof drains with factory-fitted connecting sleeve, clamping flange and bonding flange
- Tested for backflow protection

LORO Renovation sealing elements

	DN 40	DN 50	DN 70	DN 80	DN 100	DN 125	DN 150
	00941.040X	00941.050X	00941.070X	00941.080X	00941.100X	00941.125X	00941.150X
	●	●	●	●	●	●	●

Application example

Renovation flat roof drains
for existing drain bodies and pipes

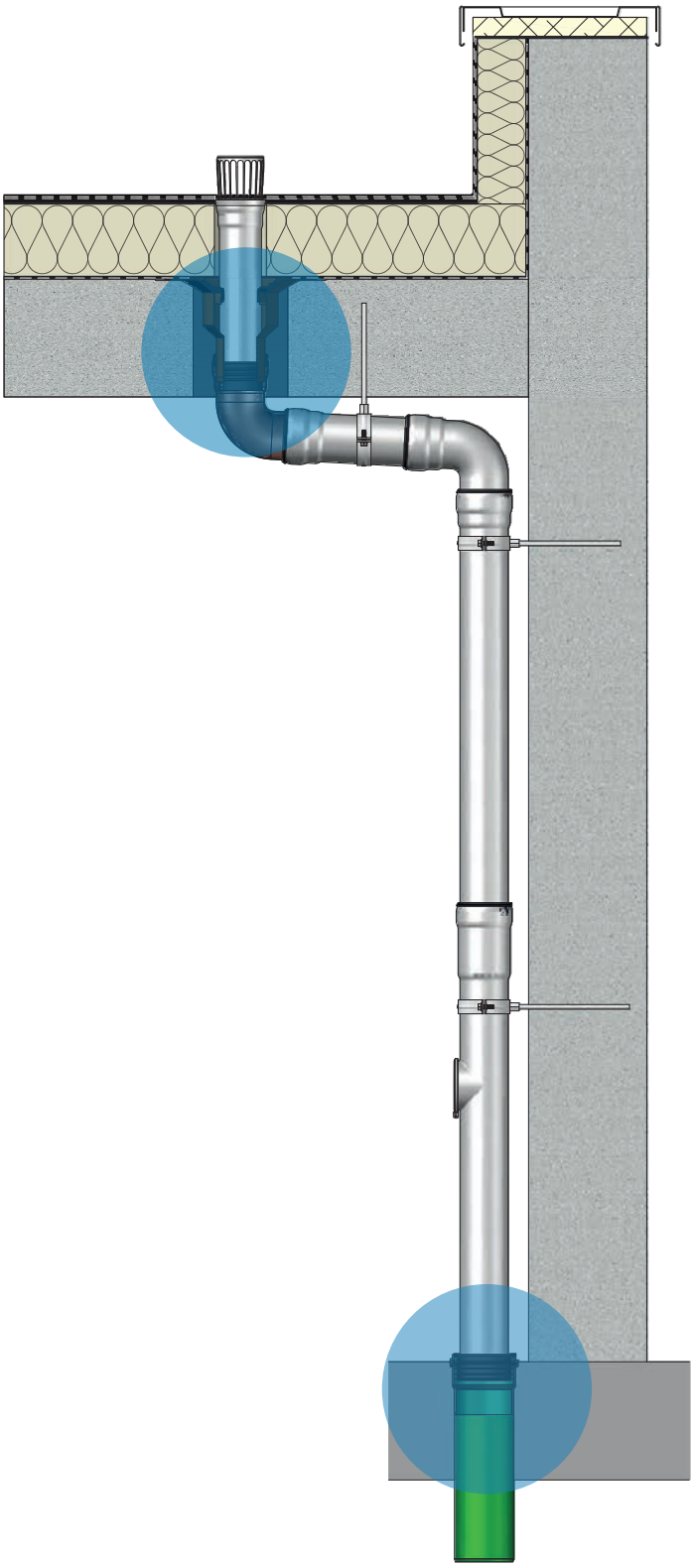

LORO-X Drain	DN 40 (42mm)	DN 50 (53mm)	DN 70 (73mm)	DN 80 (89mm)	DN 100 (102mm)	DN 125 (133mm)	DN 150 (159mm)
Nominal diameter/diameter	DN 50	DN 70	DN 80/90	DN 100	DN 125	DN 150	DN 200
Inner pipe diameter	46-56 mm	62-76 mm	77-85 mm	98-106 mm	116-130 mm	145-155 mm	194-202 mm
Article number	00941.040X	00941.050X	00941.070X	00941.080X	00941.100X	00941.125X	00941.150X

4 News 4: LORO-X ETICS Pipe socket for the extension of cleaning cover and high performance safety overflow

Advantages:
- Revisability of LORO-X pipes behind the façade or in ETICS
- Use of HSÜ for LORO-X pipes behind the façade or in ETICS
- Length can be individually adjusted by shortening or extending on site
- Backflow-proof connection behind the façade or in the ETICS system

LORO WDVS Pipe socket
suitable for 87° branches, 87° branches with short socket and reducing branches

		DN 100
	with cleaning cover	13584.100X
		●
	with high performance safety overflow	13583.100X
		●

Application example

LORO Pipe socket extension in ETICS

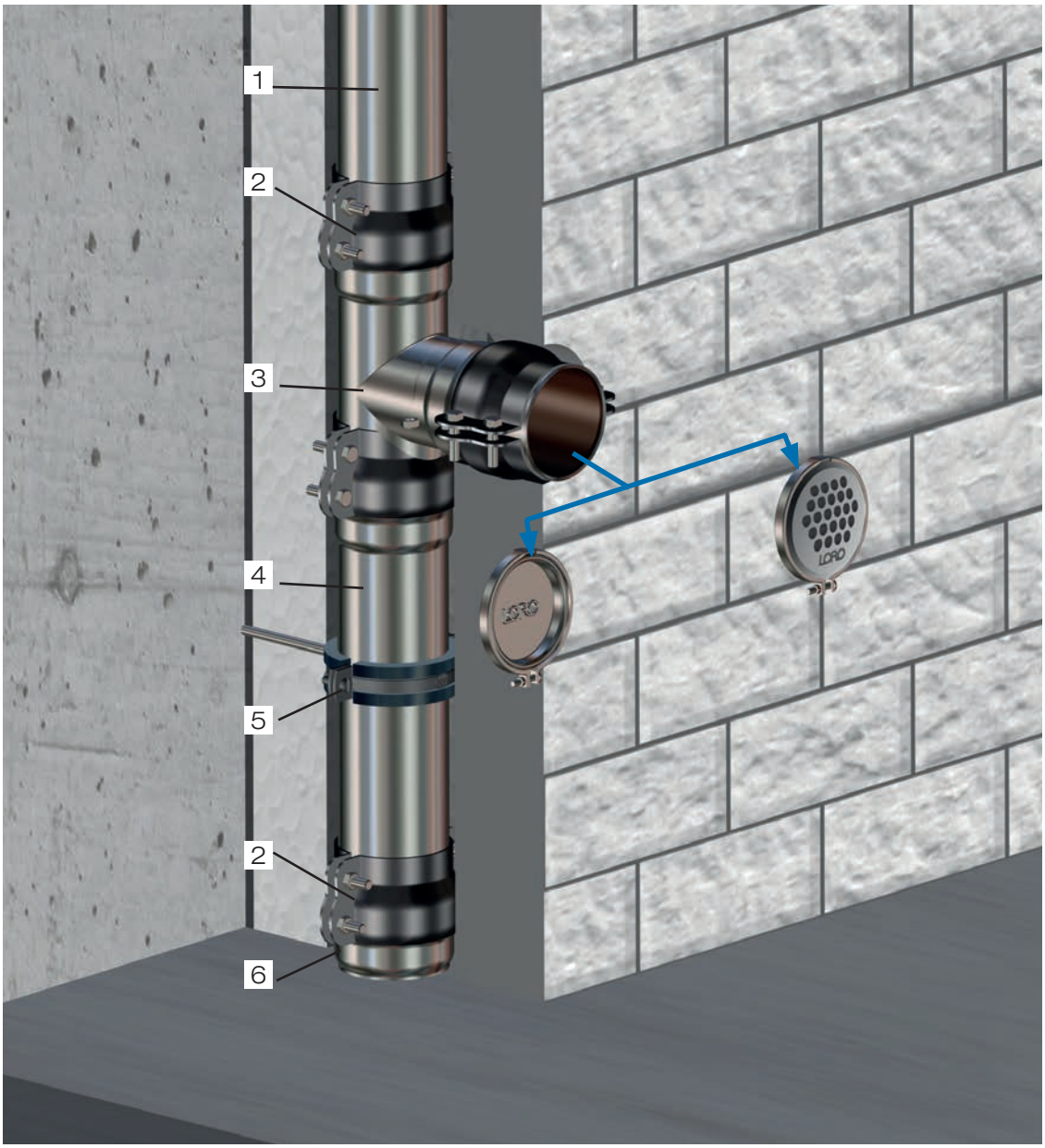

Klick mich!

Pos.	Name	Art.-No.
1	LORO-X Pipe DN 100	acc. to pipe length
2	LORO-X Securing clamp with cutout, DN 100	08061.100X
3	LORO-X Branch 90 degree, DN 100	70200.DD0X
4	LORO-X Pipe DN 100	acc. to pipe length
5	LORO-X Pipe clip with sound insulation	00974.100X
6	LORO-X Connector from LORO-X to KA-socket	00630.100X
7	LORO-X Pipe socket	
7a	LORO-X Pipe socket with cleaning cover	13584.100X
7b	LORO-X Pipe socket with cleaning cover	13583.100X
	Attention! Every LORO-X socket connection needs a sealing element:	
	DN 100	00911.100X

5 News 5: LORO-X Parapet drainage rectangular spout with bonding flange

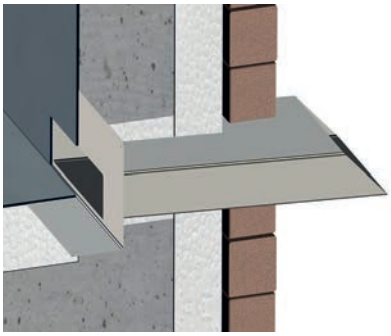

Our new rectangular spout with bendable bonding flange on site offers an aesthetically pleasing solution for façades with a rectangular appearance and serves as a simple emergency overflow without a down-pipe. With its bendable bonding flange, the spout offers height-variable installation in the parapet for water drainage onto a surface that can be flooded without damage. Made from high-quality stainless steel, the rectangular spout not only impresses with its sustainability, but also with its weather resistance and durability.

Standard or object-related

The rectangular spout is available in three standard widths of 150 mm, 300 mm and 500 mm to meet the different requirements of your project. We also offer the option of producing the rectangular spout according to individual customer requirements in terms of width, height and length. This ensures a customised solution for your specific project.

Proof of performance

The performance of the rectangular spout was verified by measurements and calculations.
The online calculation according to DIN 1986-100 with discharge table available at www.loro.de allows you to easily and precisely determine the discharge rate depending on the given conditions. This gives you a reliable basis for planning and implementing your project.

Our rectangular spout offers an attractive and, at the same time, practical solution for façades with a pattern appearance when “round” spouts do not match the design of the façade perfectly. Its wide range of adaptability, combined with proven quality and precise calculation make it the ideal choice for architects, building owners and planners who value functionality, aesthetics and quality.

Advantages:

- For façades with a rectangular architectual appearance
- As an emergency overflow without a downpipe onto a surface that can be flooded without damage
- Available in standard widths of 150 mm, 300 mm and 500 mm
- Other dimensions (width, height, length) can be produced upon request
- Discharge rates verified by measurement and calculation
- With online-calculation including flow table
- Made of stainless steel

150 mm x 50 mm: 2,2 l/s* bei Wasse
300 mm x 100 mm: 3,0 l/s* bei Wasse
500 mm x 100 mm: 5,8 l/s* bei Wasse

LORO-X Rectangular spout with bonding flange

Discharge rate according to specification sheet:

LX 2229	**150 mm x 50 mm: 2,2 l/s* at water height 35 mm**
LX 2230	**300 mm x 100 mm: 3,0 l/s* at water height 35 mm**
LX 2231	**500 mm x 100 mm: 5,8 l/s* at water height 35 mm**

Emergency drainage Gravity flow		150 mm x 50 mm	300mm x 100mm	500mm x 100mm
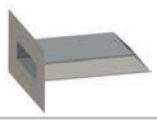	with bonding flange 600 mm to max. 800 mm x 100 mm upon request!	19040.000X	19041.000X	19042.000X
		●	●	●

LORO-X Façade cover

		150mm x 50mm	300mm x 100mm	500 mm x 100 mm
		19140.000X	19141.000X	19142.000X
		●	●	●

Project-related production possible upon request. Please contact the LOROWERK.
Up to dimensions b = 500 mm and h = 100 mm
Up to dimensions b = 750 mm and h = 150 mm with guide plate

Application example

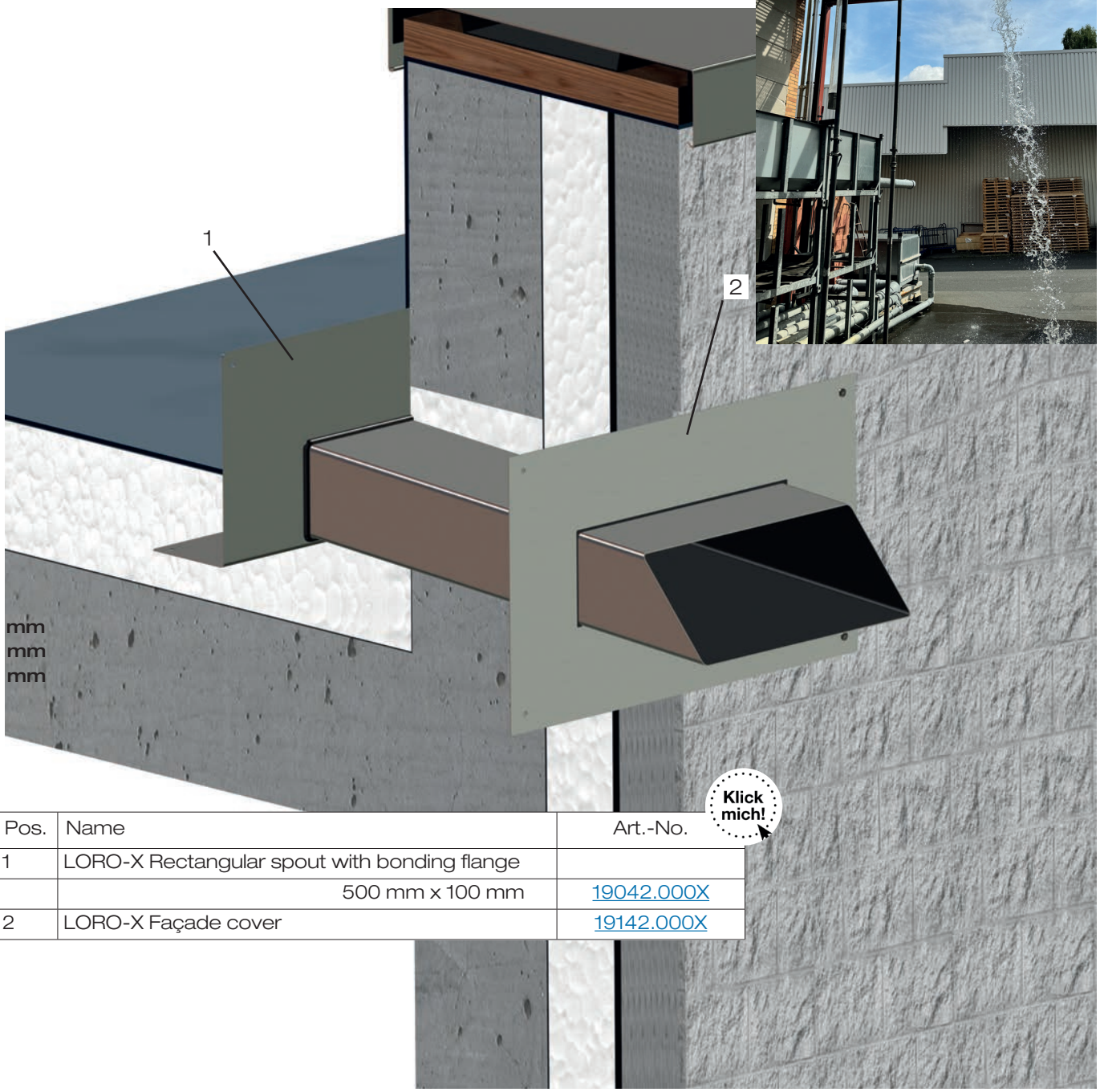

rhöhe 35 mm
rhöhe 35 mm
rhöhe 35 mm

Klick mich!

Pos.	Name	Art.-No.
1	LORO-X Rectangular spout with bonding flange	
	500 mm x 100 mm	19042.000X
2	LORO-X Façade cover	19142.000X

6 News 6: LORO-X Balcony drainage, Series H with new drainage ring, DN 70 and DN 100

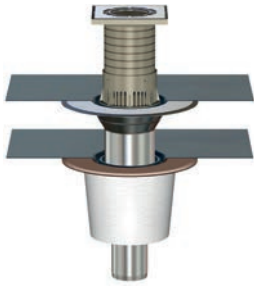

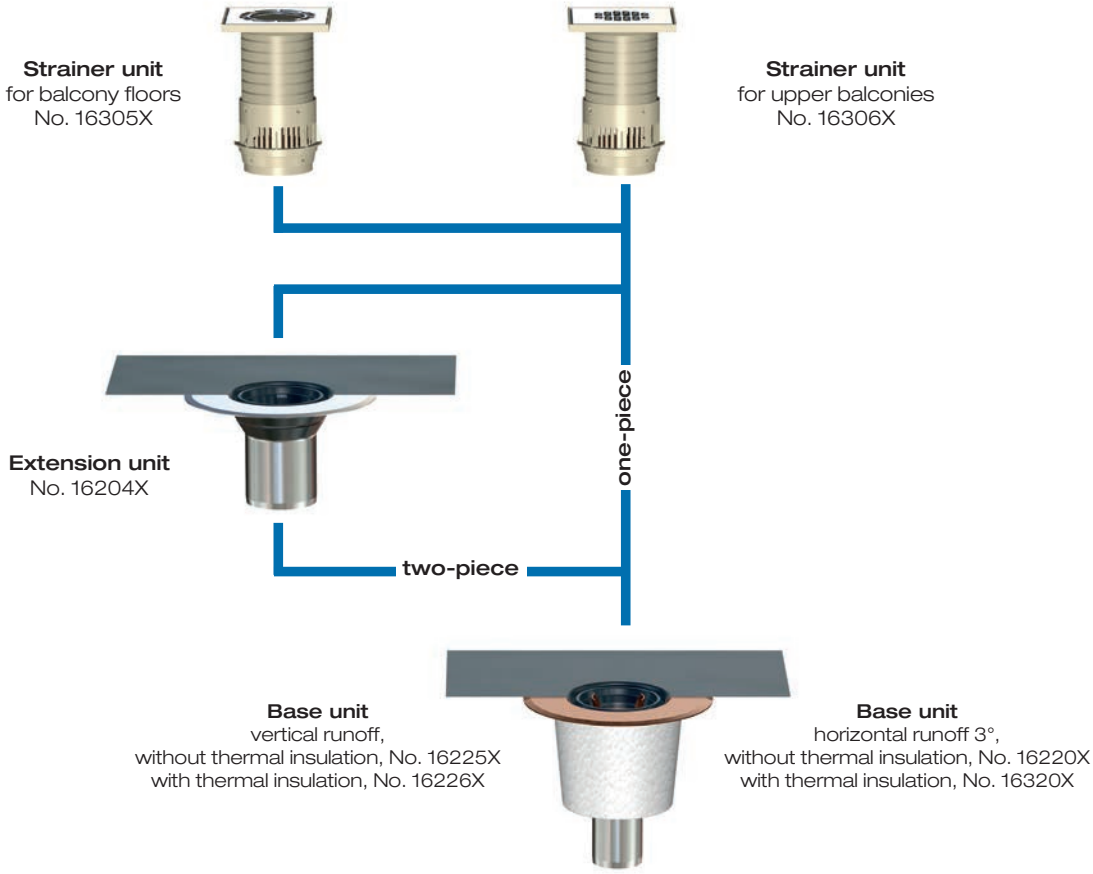

Factory pre-assembled **connecting sleeves** for balcony drainage Series H available from:

Name	DN 70	DN 100
Resitrix Bitumen/EPDM composite - **Standard**	16000.070X	16000.100X
Evalon Grau	16005.070X	16005.100X
Flagon EP-S 150	16016.070X	16016.100X
Rhenofol C-Grau	16596.070X	16596.100X
Sarnafil T66/15D	16007.070X	16007.100X
Sika-Plan Typ S	16011.070X	16011.100X
Thermofin F18	16018.070X	16018.100X
Thermofol D	16015.070X	16015.100X
Thermoplan T TL	16003.070X	16003.100X
Wolfin IB Schwarz	16006.070X	16006.100X
Novaproof Schwarz	16008.070X	16008.100X
Hertalan S Schwarz	16009.070X	16009.100X
Evalonfolie Weiß	16002.070X	16002.100X
Evalastic Hellgrau	16010.070X	16010.100X
Alkorplan F35170 Schwarz	16012.070X	16012.100X
Rhepanol H Schwarz	16013.070X	16013.100X
Nogaflex Verbundwerkstoff	16004.070X	16004.100X
Cosmofin F-Folie Grau	16017.070X	16017.100X
Tectofin R Grau	16020.070X	16020.100X

A connecting sleeve made of bitumen/EPDM composite is supplied as standard. If a different connecting sleeve is required, please specify the desired one when ordering.

LORO-X Balcony direct drains with connecting sleeve
made of galvanised steel, additionally coated, DN 70 and DN 100
Connecting sleeve made of bitumen/EPDM composite as standard for bonding/welding with bituminous and EPDM sealing sheets. If other connecting sleeves are required, please specify separately.

Drainage below the slab covering.

New strainer support:
- Higher load of the new drainage variant possible
- More stable installation
- Secure drainage through drainage slots
- Easy shortening of the strainer unit

LORO Balcony direct drain strainer units, Series H
consisting of: strainer, strainer support and drainage ring

	DN 70	DN 100	
with strainer for balcony floors	16305.070X	16305.100X	
	●	●	
with strainer for upper balconies	16306.070X	16306.100X	
	●	●	

Complete units - Series H

For balcony floors, one-piece		DN 70	DN 100	
vertical runoff	without thermal insulation	16277.070X	16277.100X	
		●	●	
	with thermal insulation	16390.070X	16390.100X	
		●	●	

For upper balconies, one-piece		DN 70	DN 100	
vertical runoff	without thermal insulation	16278.070X	16278.100X	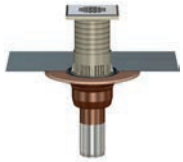
		●	●	
	with thermal insulation	16391.070X	16391.100X	
		●	●	

For balcony floors, two-piece*		DN 70	DN 100	
vertical runoff	without thermal insulation	16287.070X	16287.100X	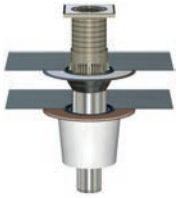
		●	●	
	with thermal insulation	16397.070X	16397.100X	
		●	●	

For upper balconies, two-piece*		DN 70	DN 100	
vertical runoff	without thermal insulation	16288.070X	16288.100X	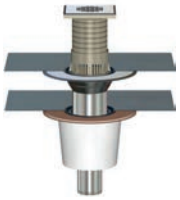
		●	●	
	with thermal insulation	16398.070X	16398.100X	
		●	●	

* for installation height from 60 - 120 mm, for higher installations use extension pipe No. 16587X and sealing element Nr. 911X.

Please specify the material of the connecting sleeves, see page 18.

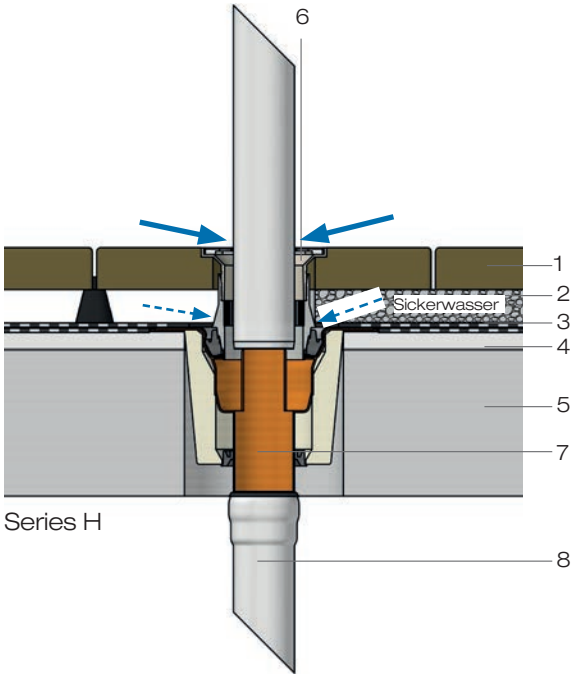

Application Examples Series H:

Balcony slab with paving slab/tiles in mortar bedding, with sealing sheet, without thermal insulation. Drainage at one level, with additional seepage discharge.

1 Paving slab/tiles
2 Mortar bedding
3 Sealing sheet, if necessary on separating and/or levelling layer
4 Levelling screed
5 Concrete slab
6 Strainer support, height-adjustable, and strainer made of stainless steel with pipe penetration and drainage ring for seepage discharge
7 Direct drain with connecting sleeve and clamping ring without drainage openings (factory-fitted), vertical runoff, without thermal insulation
8 LORO-X steel discharge pipe

LORO solution:
Balcony direct drains with connecting sleeve, Series H, vertical runoff, one-piece, without thermal insulation, with height-adjustable strainer support and strainer made of stainless steel with pipe penetration or for upper balconies.

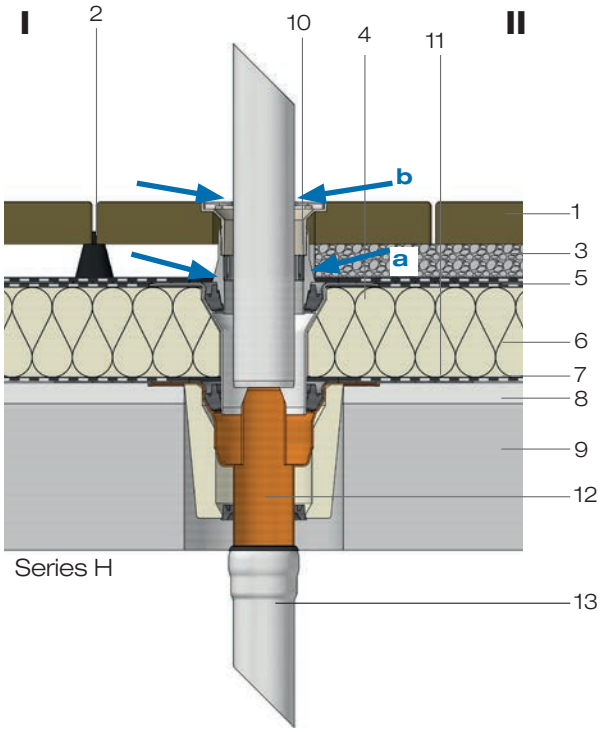

Balcony slab with paving slab
I) on paving slab support
II) on granular bedding (grit, gravel etc.)
with sealing sheet,
with thermal insulation.
Drainage at two levels:
a) on the sealing
b) on the paving slab.

1 Paving slab
2 Paving slab support or
3 Granular bedding
4 Coarse grit
5 Sealing sheet, if necessary on separating and/or levelling layer
6 Thermal insulation
7 Vapor barrier, if necessary on separating and/or levelling layer
8 Levelling screed
9 oncrete slab
10 Strainer support, height-adjustable, and strainer made of stainless steel with pipe penetration and drainage ring
11 Extension cartridge with connecting sleeve and clamping ring without drainage openings (factoryfitted)
12 Direct drain with connecting sleeve and clamping ring without drainage openings (factory-fitted), vertical runoff, with thermal insulation
13 LORO composite pipe

LORO solution:
Balcony direct drains with connecting sleeve, Series H, vertical runoff, two-piece, with or without thermal insulation, with height-adjustable strainer support and strainer made of stainless steel with pipe penetration or for upper balconies.

See page 19 for article numbers of Series H

Application example

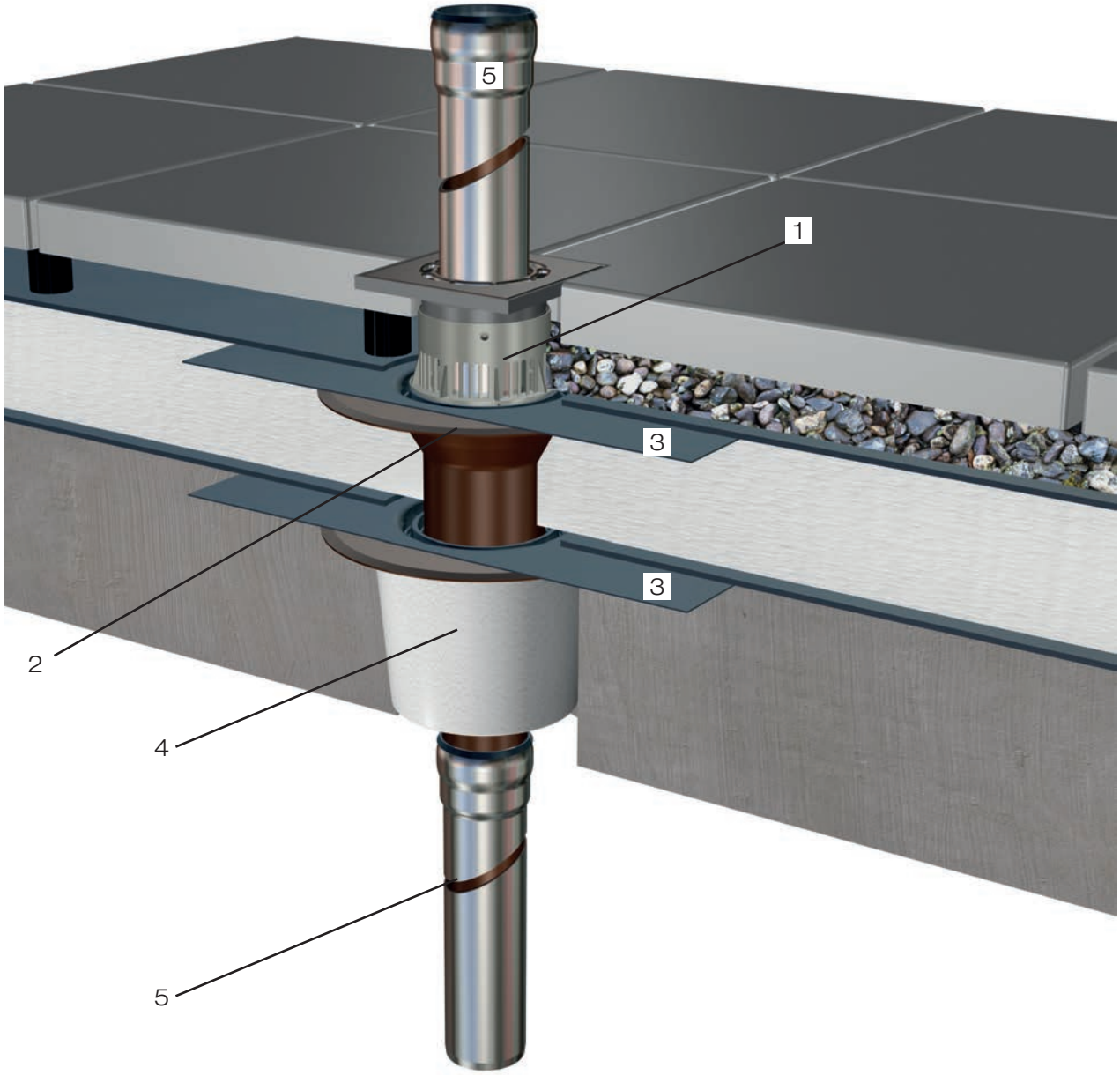

Klick mich!

Pos.	Name	Art.-Nr.
1	Strainer unit, Series H, with strainer for balcony floors	16305.070X
2	LORO-X balcyony direct drain extension unit	16204.070X
3	Standard connecting sleeve for bituminous sheets, more available upon request	16000.070X
4	LORO-X balcony direct drain base units, wit thermal insulation	16226.070X
5	Further LORO-X pipe	

7 News 7: LORO-X Balcony drainage, Series V, DN 50

Advantages:

- Space-saving for small balcony areas
- Completing Series V
- Installation of base body and setup elements independent of time
- Modular setup elements for all balcony structures
- Setup elements can be replaced during renovation
- Barrier-free, low structure, safety aspect, high-quality residential construction
- Great variability as with DN 70 and DN 100
- Made of high-quality stainless steel

Setup diagramm one-piece drain

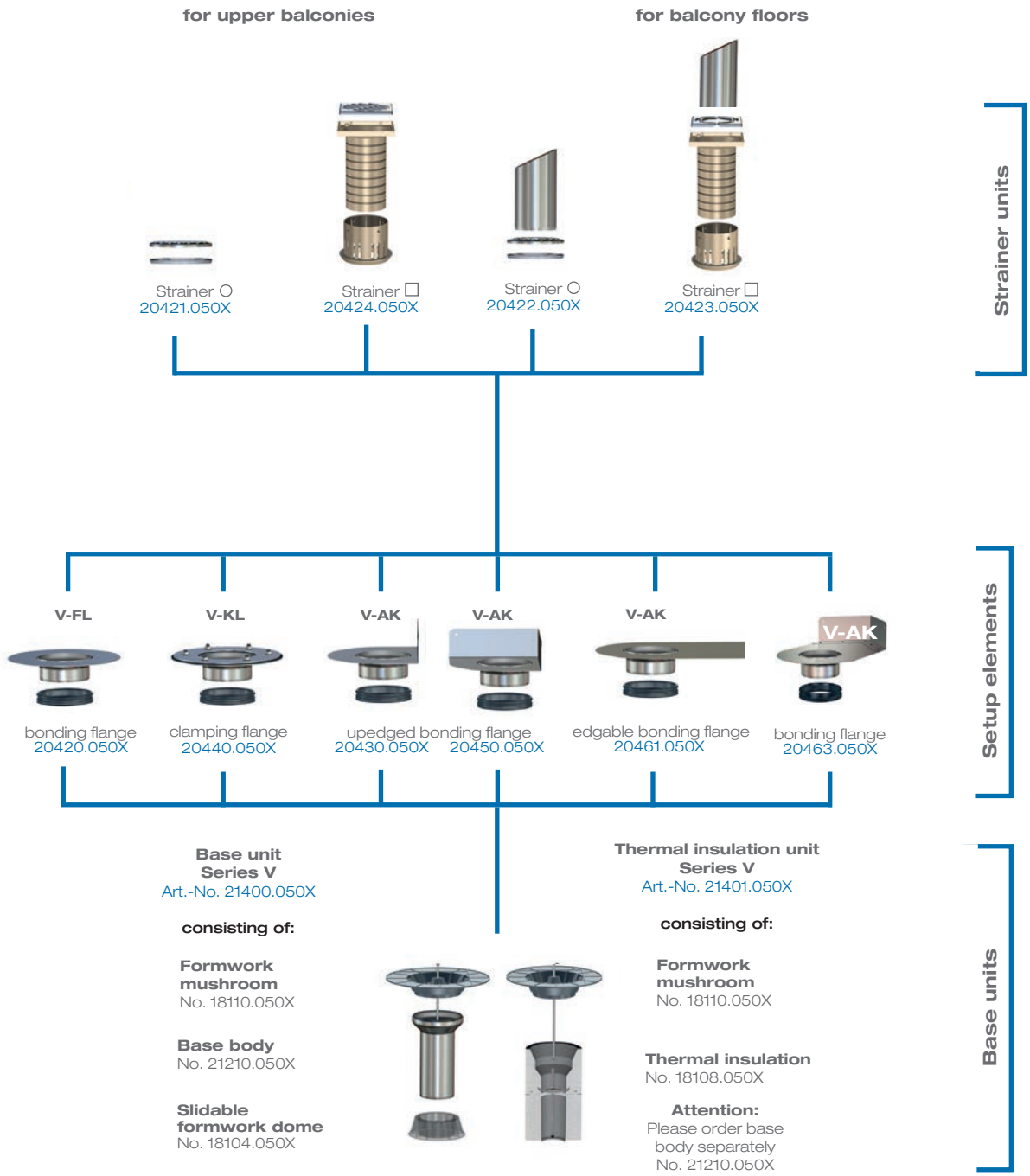

Attention: Please order downpipe separately.

* adapt flange for installation in Series V-AK

Setup diagramm <u>two-piece drain</u>

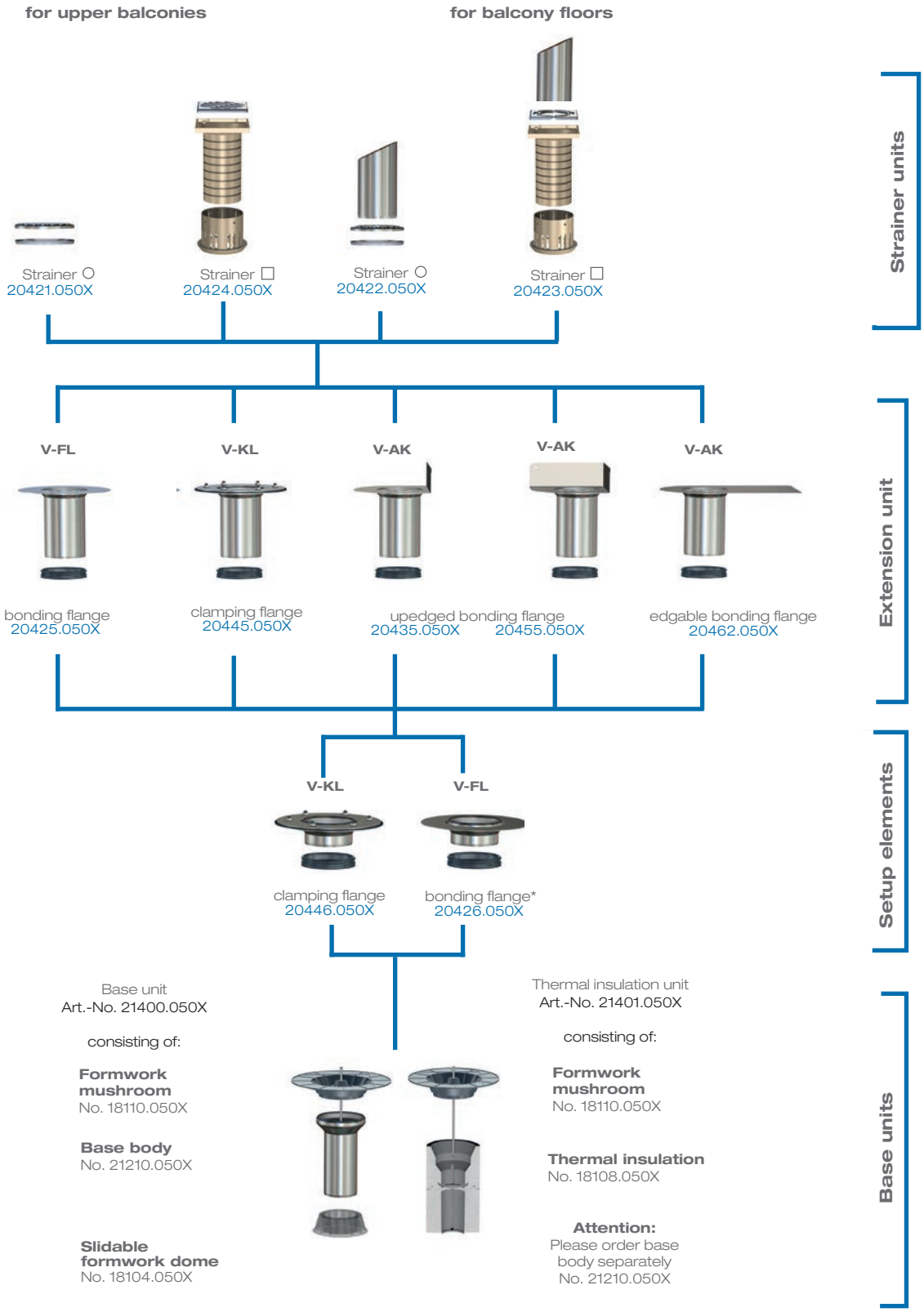

Attention: Please order downpipe separately.

* adapt flange for installation in Series V-AK

7 News 7: LORO-X Balcony drainage, Series V, DN 50

LORO-X Balcony drains, Series V

variable balcony drainage system, made of stainless steel, DN 50

Base unit for LORO balcony drains, Series V

		DN 50
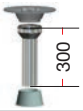	consisting of: base body, formwork mushroom and formwork dome	21400.050X
		●

Thermal insulation unit for LORO balcony drains, Series V

		DN 50
	consisting of: formwork mushroom, thermal insulation body and fastening screw, without base body 21210X for later installation	21401.050X
		●

Individual components/additional components for base body, Series V

		DN 50
	formwork mushroom	18110.050X
		●
	base body Series V	21210.050X
		●
	thermal insulation body	18108.050X
		●
	formwork dome	18104.050X
		●

Setup elements for one-piece version

Series V-FL, with bonding flange, for sealing with liquid plastic

		DN 50
	consisting of: setup element with bonding flange, sealing element*	20420.050X
		●

Series V-AK, with upedged bonding flange for sealing with liquid plastic in wallareas

		DN 50
	consisting of: setup element with upedged bonding flange, sealing element*	20430.050X
		●

* For DN 50 sealing element DN 70 inclusive.

Please order LORO-X steel discharge pipe separately.

Setup elements for one-piece version

Series V-AK, with bonding flange and variable upedge flange for sealing with liquid plastic

consisting of: setup element with upedged bonding flange, sealing element*	**DN 50**	
	20461.050X	
	●	

Series V-AK, with bonding flange and variable upedge flange for sealing with liquid plastic in wall-corner areas and variable upedge flange

consisting of: setup element with upedged bonding flange, sealing element*	**DN 50**	
	20463.050X	
	●	

Series V-AK, with upedged bonding flange for sealing with liquid plastic in wall-corner areas

consisting of: setup element with upedged bonding flange for wall-corner areas, sealing element*	**DN 50**	
	20450.050X	
	●	

Series V-KL, with clamping flange, for sealing with sealing sheets

consisting of: setup element with clamping flange, sealing element*	**DN 50**	
	20440.050X	
	●	

Setup elements for two-piece version

Series V-FL, setup element with bonding flange, for sealing with liquid plastic

consisting of: setup element with socket and bonding flange, sealing element*	**DN 50**	
	20426.050X	
	●	

Series V-KL, setup element with clamping flange, for sealing with sealing sheets

consisting of: setup element with socket and clamping flange, sealing element*	**DN 50**	
	20446.050X	
	●	

Extension unit for two-piece version

Series V-FL, extension unit with bonding flange, for sealing with liquid plastic

consisting of: extension cartridge with bonding flange, sealing element*	**DN 50**	
	20425.050X	
	●	

Series V-AK, extension unit with upedged bonding flange for sealing with liquid plastic in wall areas

consisting of: extension cartridge with upedged bonding flange, sealing element*	**DN 50**	
	20435.050X	
	●	

* For DN 50 sealing element DN 70 inclusive.

Please order LORO-X steel discharge pipe separately.

Extension units for two-piece version

Series V-AK, extension cartridge with upedged bonding flange for sealing with liquid plastic in wall-corner areas

	consisting of: extension cartridge with upedged bonding flange for wall-corner areas, sealing element*	**DN 50**
		20455.050X
		●

Series V-AK, extension unit with bonding flange and variable upedge flange for sealing with liquid plastic

	consisting of: setup element with upedged bonding flange, sealing element*	**DN 50**
		20462.050X
		●

Series V-KL, extension unit with clamping flange, for sealing with sealing sheets

	consisting of: extension cartridge with clamping flange, sealing element*	**DN 50**
		20445.050X
		●

* For DN 50 sealing element inclusive.

LORO Balcony drain strainer units

For balcony structure without additional covering:

LORO-Balcony strainer unit, round, for upper balconies

	onsisting of: strainer round, without pipe opening, support ring	**DN 50**
		20421.050X
		●

LORO-Balcony strainer unit, round, for balcony floors

	consisting of: strainer round, with pipe opening, support ring	**DN 50**
		20422.050X
		●

LORO-Balcony strainer unit, quadratic, for upper balconies

	consisting of: strainer quadratic, without pipe opening, strainer holding fixture, height ajustable, support ring	**DN 50**
		20424.050X
		●

LORO-Balcony strainer unit, quadratic, for balcony floors

	consisting of: strainer quadratic, with pipe opening, strainer holding fixture, height ajustable, support ring	**DN 50**
		20423.050X
		●

Please order LORO-X steel discharge pipe separately.

Application example

LORO Balcony drainage Series V, DN 50

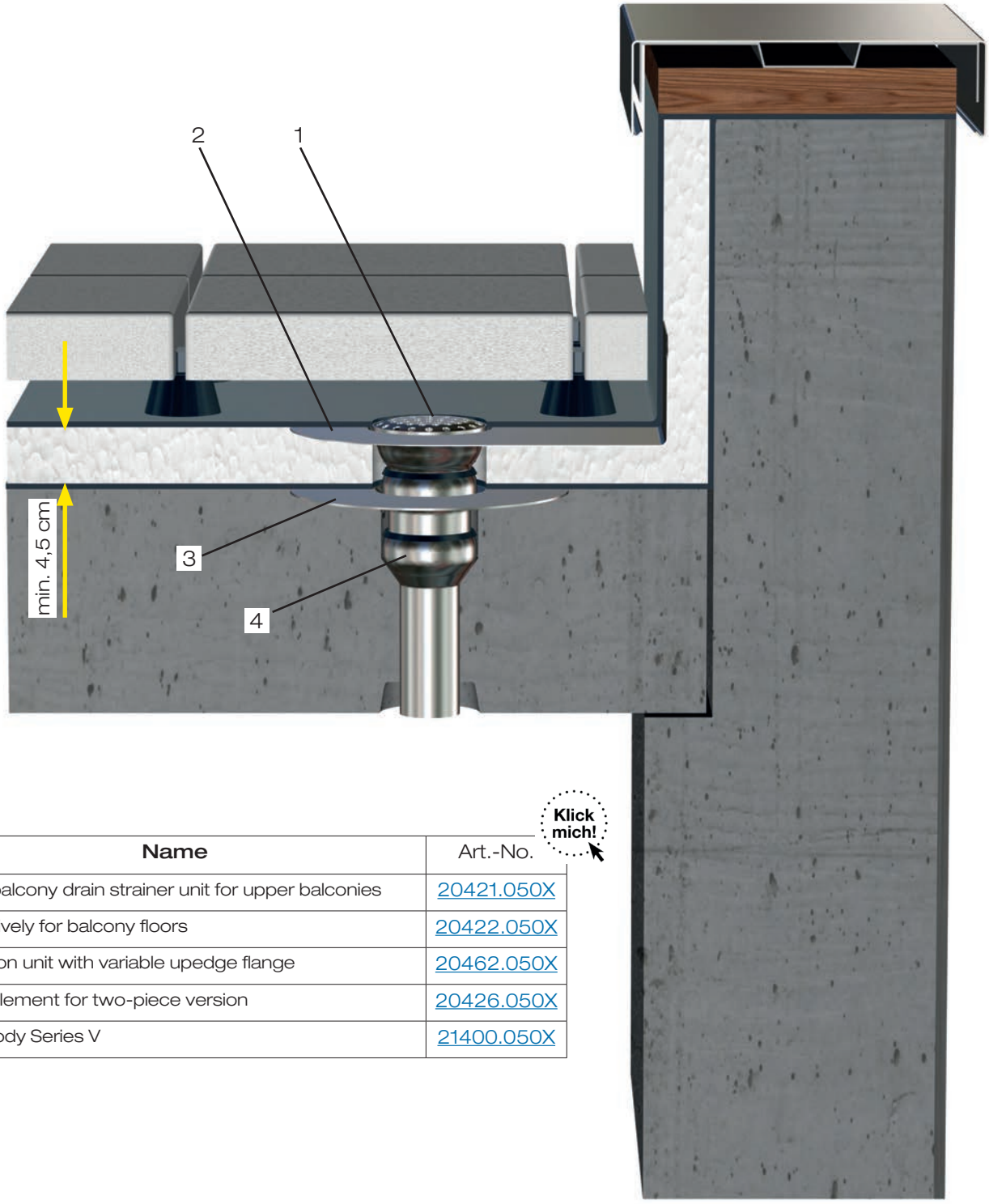

Klick mich!

Pos.	Name	Art.-No.
1	LORO balcony drain strainer unit for upper balconies	20421.050X
	alternatively for balcony floors	20422.050X
2	Extension unit with variable upedge flange	20462.050X
3	Setup element for two-piece version	20426.050X
4	Base body Series V	21400.050X

Application example

LORO Balcony drainage Series V, DN 50

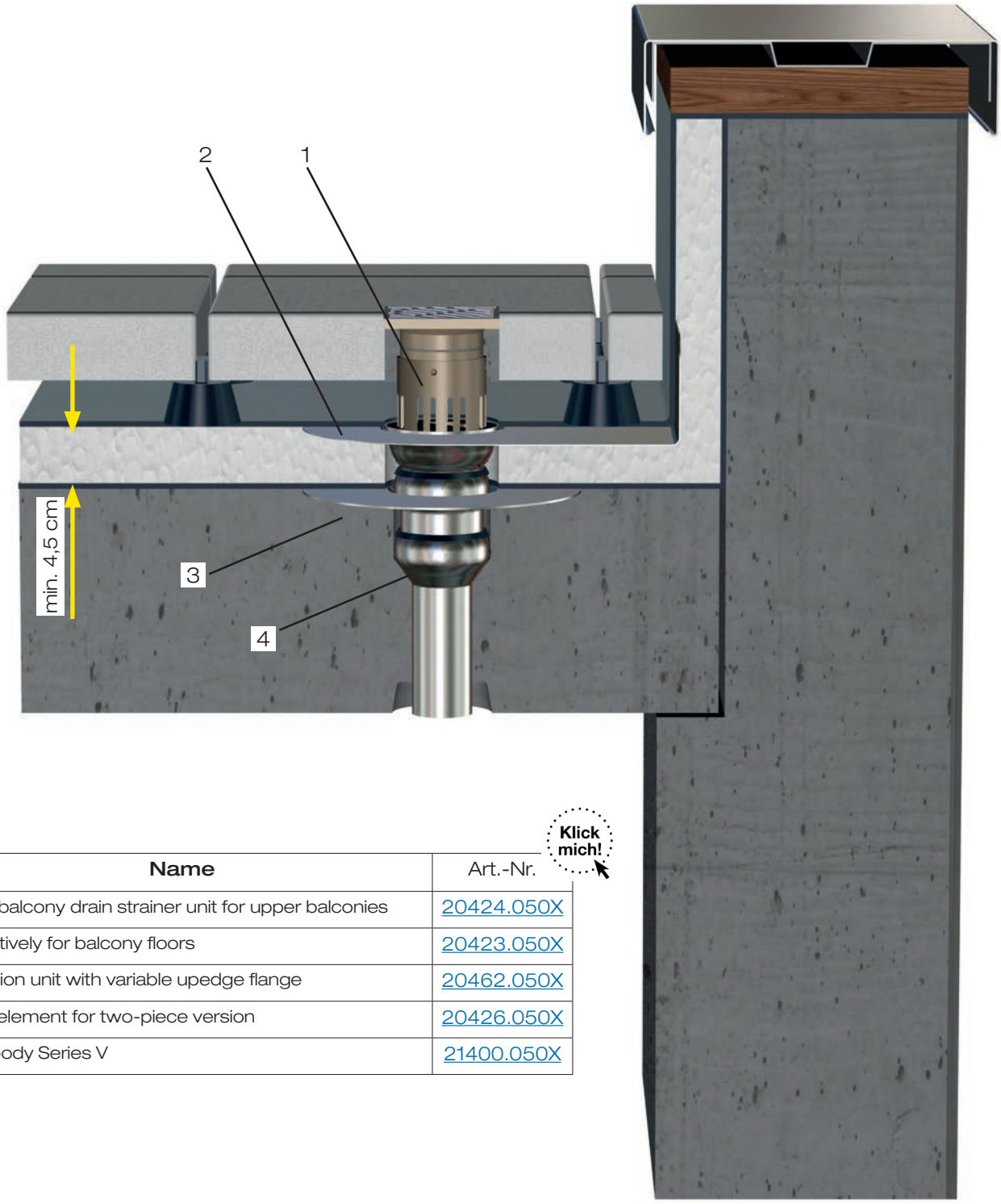

Klick mich!

Pos.	Name	Art.-Nr.
1	LORO balcony drain strainer unit for upper balconies	20424.050X
	alternatively for balcony floors	20423.050X
2	Extension unit with variable upedge flange	20462.050X
3	Setup element for two-piece version	20426.050X
4	Base body Series V	21400.050X

8 News 8: LORO-X Fittings

LORO-X Support pipe - Pipe in pipe -

	DN 100	
recommended for longer downpipes over 12 m	13582.100X	
	●	

LORO-X Bend 87 degrees with extended outlet 119 mm DN 100

	DN 100	
	00306.100X	
	●	

LORO-X outlet part for DJ main/emergency combination DN 70/40

	DN 70/40	
	05049.CA0X	
	●	

LORO-X Standpipe with high performance safety overflow

	DN 125	DN 150	
1500 mm long, made of galvanized steel	55154.125X	55154.150X	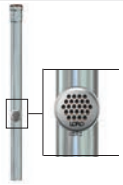
	●	●	
2000 mm long, made of galvanized steel	55204.125X	55204.150X	
	●	●	

LORO-X VARIO edge spout with fire protection sleeve

	DN 70	DN 100	
	22994.070X	22994.100X	
	●	●	

LORO-collecting box - Pipe in pipe -

for DUOFLUX® Main/emergency combination - Pipe in pipe parapet drain, Art.-No. 13508.100X	04360.100X	
	●	

LORO-XC Rain covers, made of stainless steel

	DN 200	
	21203.200X	
	●	

LORO-Strainer, made of stainless steel

for emergency drains, flat version, h = 45 mm	21022.000X	
	●	

9 Neuheit 9: LORO-X DRAINJET® Emergency drainage with height adjustable weir and siphonic flow, DN 50, DN 70 und DN 100

Advantages:

- Ideal for emergency drainage of retention roofs
- High discharge at low submergence
- Object-related weir height adjustable according to retention water level
- Reliable protection in heavy rain and high retention

LORO-X DRAINJET®

Emergency drain with height adjustable weir

with clamping flange made of stainless steel DIN EN 1253, DN 50 - DN 100,
with standard cover and siphonic flow

Serie 49

Emergency drainage		DN 50	DN 70	DN 100
Siphonic flow				
		21314.050X	21314.070X	21314.100X
		●	●	●

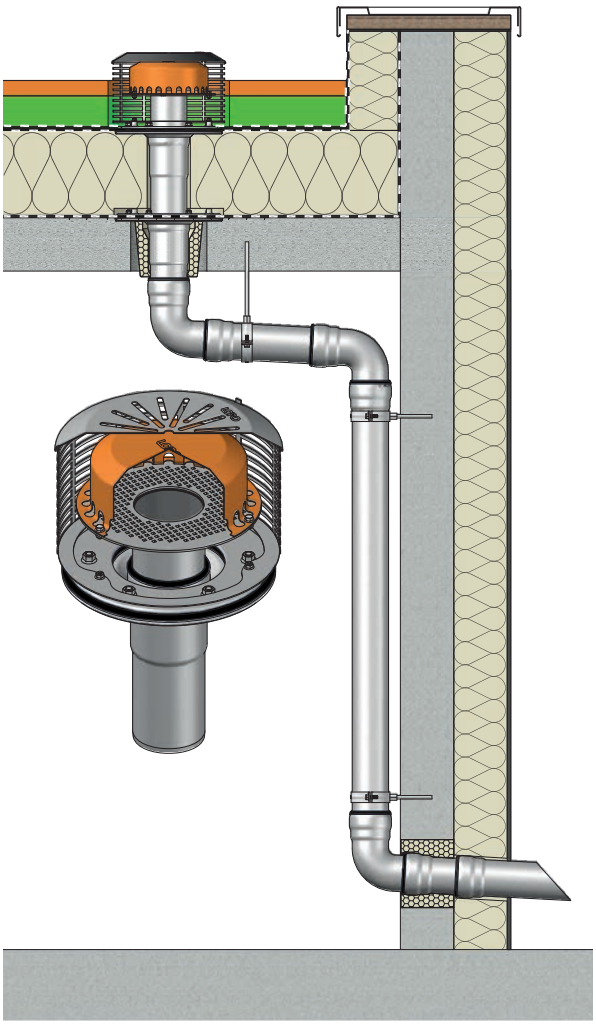

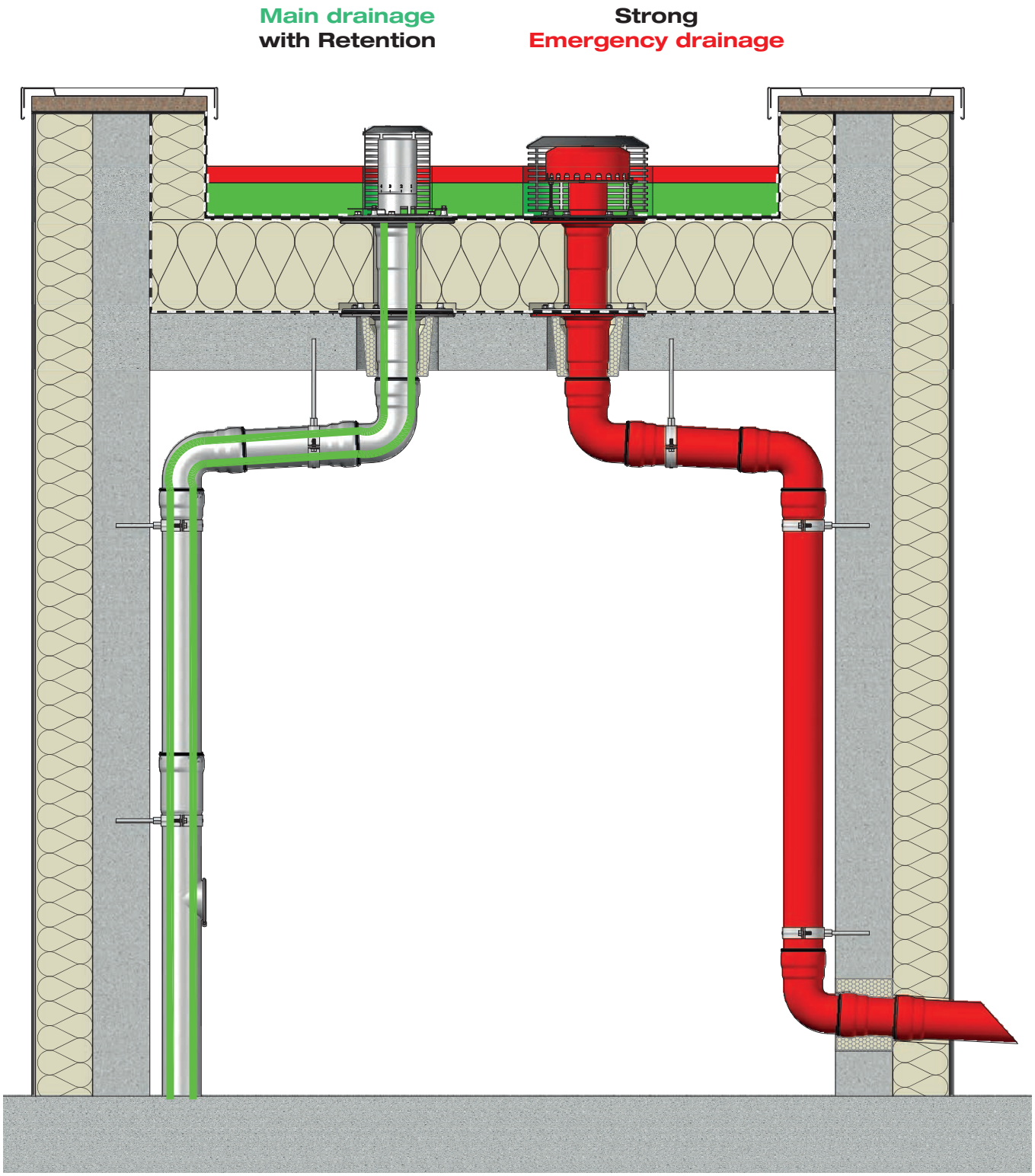
Main drainage
with Retention
Strong
Emergency drainage

10 Neuheit 10: LORO-X VARIOFIT Multiple Pipe Penetrations

Variable and precisely tailored to customer requirements
- For minimal spacing between pipes

LORO-X VARIOFIT pipe penetrations with or without socket consist of multiple closely spaced pipe penetrations on a stainless steel flange of fire protection class A1, which can be arranged on the surface according to your requirements on a project-specific basis.

We look forward to your inquiry!

Example as vertical pipe penetration for 3 LORO-X pipes

Small Distances

The typically large distances between pipes according to flat roof guidelines are significantly reduced by arranging them on a single sealing plate. The distance to the parapet or other rising components can also be minimized by raising the adhesive surface.

For Ventilation, Drainage, and Cable Penetration

When using the LORO-X socket, the pipes are led through the sealing layer in a pressure-resistant and backflow-safe manner. This allows drainage pipes, cable protection pipes, or ventilation pipes to be combined through sealed surfaces. All known advantages and technical data of LORO-X steel drainage pipes or LORO-XCL stainless steel drainage pipes are transferable to the pipe penetrations.

Example with 3 LORO-X DRAINLET® drains for drainage and 3 LORO-X pipe penetrations

Alternatively, a strainer unit for surface drainage can be provided at any position instead of a socket. This also allows pipe penetrations in combination with, for example, roof or balcony drainage.

Secure Sealing

Sealing on the stainless steel flange (as an adhesive flange) is easily done with suitable liquid plastics. Alternatively, a clamping flange for sealing membranes can be provided.

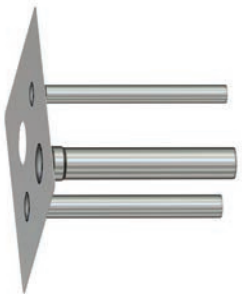

Example as a wall penetration for 3 watertight LORO-X pipes and 1 on-site penetration

Two-Part for Warm Roofs

On request, LORO-X VARIOFIT pipe penetrations can also be manufactured in two parts, with an upper and lower part. Since it is difficult to cut multiple adjacent pipes on-site, the pipe lengths of the upper part are manufactured according to your specifications (usually 350 to 400 mm) to precisely bridge the thickness of the thermal insulation. The pipe lengths of the lower part are

manufactured accordingly so that they extend through the roof structure exactly to the connection with the internal pipe system.

Advantages

- Corrosion and UV resistant
- Made of stainless steel with 1 mm thickness or according to requirements
- LORO-X DRAINLET cover possible for surface drainage
- LORO-X connection and transition pieces can be combined

Dimensions

- External dimensions up to 1000 x 700 mm for freely placeable pipe penetrations
- LORO-X sockets for watertight penetration in DN 40, 50, 70, 100, 125, 150
- Minimum distances of the sockets (center dimension)
- DN 40, 50, 70 and 100 = 140 mm
- DN 125 = 180 mm
- DN 150 = 210 mm

LORO-VARIOFIT Multiple pipe penetrations

		DN 40	DN 50	DN 70	DN 100	DN 125	DN 150
		•	•	•	•	•	•
		•	•	•	•	•	•
		•	•	•	•	•	•

The LORO-Service:
Everything from a single source.

LORO-X Service-Team

Our LORO-X service team offers decisive service and consulting services. The calculation and planning of complete drainage systems in your building project is just as much a part of our offer as the construction site support provided by our technical LORO field service. With LORO, you always have a reliable partner for your roof and balcony drainage systems.

Calculation and design

When planning and installing roof drainage systems, the experience of roof drainage technicians is often required. Together with our specialists, you can develop detailed solutions for current projects. Whenever you are planning a parapet, roof or balcony drainage system, we look forward to personally supporting your project!

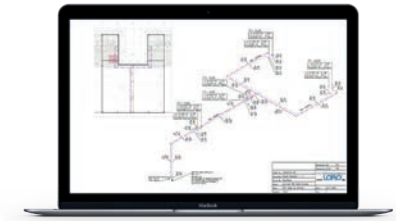

Specification sheets

Each measured drainage curve is the characteristic curve of a prefabricated LORO-X roof drainage system, in which for each water level on the roof the corresponding discharge from the roof can be read off.The LORO-X drainage curve, together with the CAD drawing and the parts list, provides the standard-compliant proof of performance for the prefabricated roof drainage system. At the same time, the LX data sheet provides the basis for planning the roof drainage system.

Fast delivery

Thanks to our high-bay warehouse for smaller items and our large storage areas for long pipes, almost all standard items can be delivered at short notice. We will be happy to arrange the optimum delivery date to your warehouse or directly to the construction site. When it has to be quick: In many cases, we can deliver across Europe from one day to the next with the LORO-X express service!

Customised solutions

The materials steel, stainless steel and aluminium are ideally suited for customised solutions! LORO‘s roof drainage technicians will find the right solution for almost any task in consultation with you. Sawing, bending and welding are the flexible forming options for steel. Without having to rely on casting moulds, our metal processing specialists can produce many special solutions for you promptly.

Long-Lasting Use at the Highest Level

LORO-X Restoration-Cycle

100% Recycling

During professional LORO-X restoration, the product returned to LORO is checked regarding all dimensions and tolerances and restored with millimetre precision. With the subsequent renewal of the zinc coating, the underlying steel is reused 100% in the new product without melting.

DGNB Navigator

0% Steel Consumption - 100% Recycling

Buildings should be constructed or renovated to be ‘recyclable’ so that the products used can experience several life cycles. With the so-called ‘Design for disassembly’, the ability to dismantle all system components is already considered during the planning phase. This means that there is no waste at the end of the operating life; instead, all system parts can be reused in a new roof drainage system after being qualitatively restored by LORO.

LORO-X steel discharge pipes and fittings made of galvanised steel are optimally recyclable thanks to the protective zinc coating, as the protected steel is ‘preserved’. Fossil raw materials, such as iron ore and energy, theoretically remain in the once produced LORO-X steel discharge pipe for an infinite number of life cycles.

Renewable Steel-Zinc Connection

This is possible with LORO-X steel discharge pipes thanks to the two-layer structure of the steel and zinc coating: in the decades of the respective life cycle, usually only the protective hot-dip galvanising is exposed to environmental influences without the underlying steel being affected!

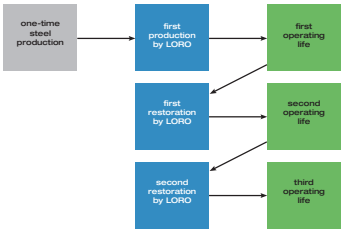

Regional Production

In contrast to the largely automated new production of large quantities, the professional restoration of individual returned products is real ‘manual labour’. The preparation, calibration and re-galvanising of the object-related product mix is carried out by our specialists regionally with minimal transport distances.

Minimised ecological footprint

LORO-X creates a sustainable recycling cycle over generations:
- Sustainable use of a LORO product over many generations
- No energy-intensive melting down of existing steel
- No admixture of new steel
- No mining of new iron ore
- Minimal transport routes to and from Bad Gandersheim, in the green heart of Germany

Stahl feuerverzinkt bleibt.

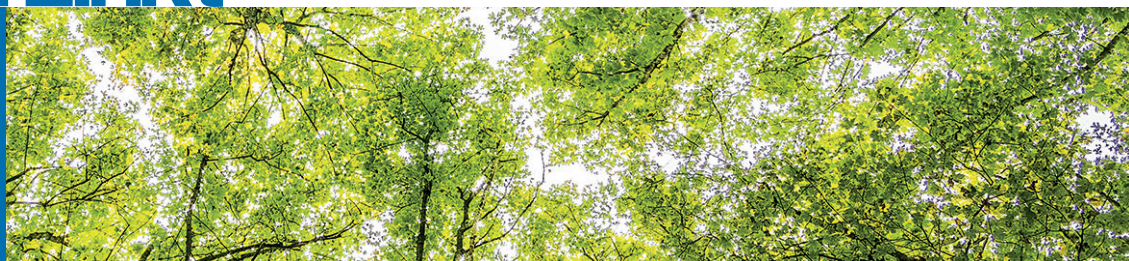

LORO-X Roof Drainage Systems

Consisting of drains, pipes and fittings:

LORO-X Parapet drainage
LORO-X Flat roof drainage
LORO-X Steel discharge pipes
LORO-X Balcony drainage

Contakt
LOROWERK K.H.Vahlbrauk GmbH & Co.KG
Kriegerweg 1
37581 Bad Gandersheim

Telefone: +49 (0) 5382 710
Telefax: +49 (0) 5382 71203
E-Mail: infocenter@lorowerk.de
www.loro-x-com